REV.	ECN NO OR DESCRIPTION	REVISED	DATE

Pb Process Capable

RoHS Compliant 2011/65/EU

HALOGEN Compliant Halogen Free

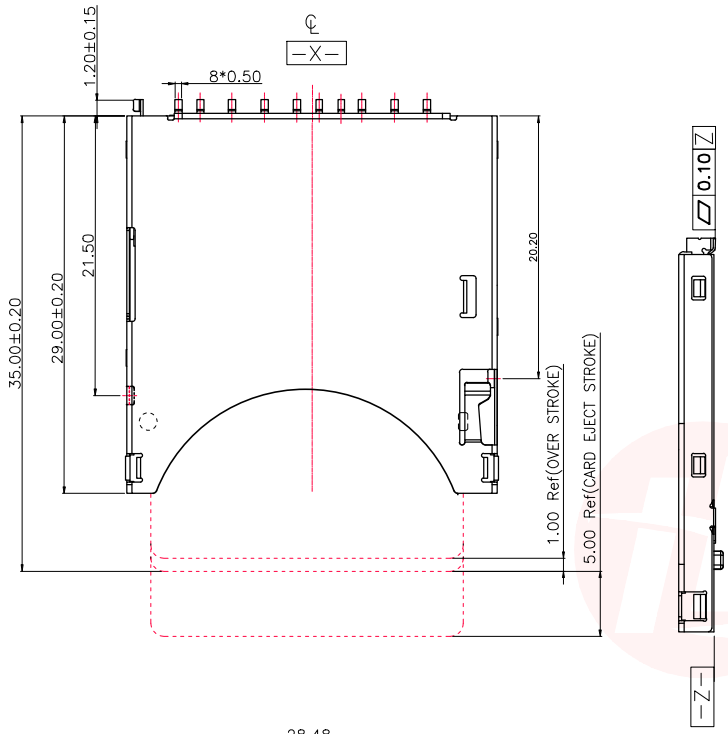

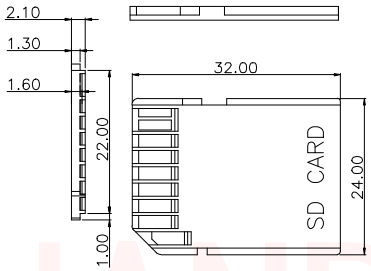

MATERIAL:

Insulator: High Temperature Thermoplastic,UL 94V-0.
Contact: Copper Alloy

Electrical:

Current Rating :0.5mA AC/DC max.
Voltage Rating :12V AC/DC
Ambient Temperature Range :-20°C~+60°C
Storage Temperature Range :-40°C~+70°C
Ambient Humidity Range :95% R.H. Max.
Contact Resistance:100mΩmax.
Insulation Resistance:1000MΩmin./500VDC
Mating Cycles:5,000 Insertions

Usable Memory Card: SD&MMC Card

SD CARD PIN DESIGN

PIN NO.	NAME	TYPE	DESCRIPTION
#1	CD/DAT3	I/O/PP	CARD DETECT/DATA LINE(BIT3)
#2	CMD	PP	COMMAND/RESPONSE
#3	VSS1	S	SUPPLY VOLTAGE GROUND
#4	VDD	S	SUPPY VOLTAGE
#5	CLK	I	CLOCK
#6	VSS2	S	SUPPLY VOLTAGE GROUND
#7	DAT0	I/O/PP	DATA LINE(BIT 0)
#8	DAT1	I/O/PP	DATA LINE(BIT 1)
#9	DAT2	I/O/PP	DATA LINE(BIT 2)

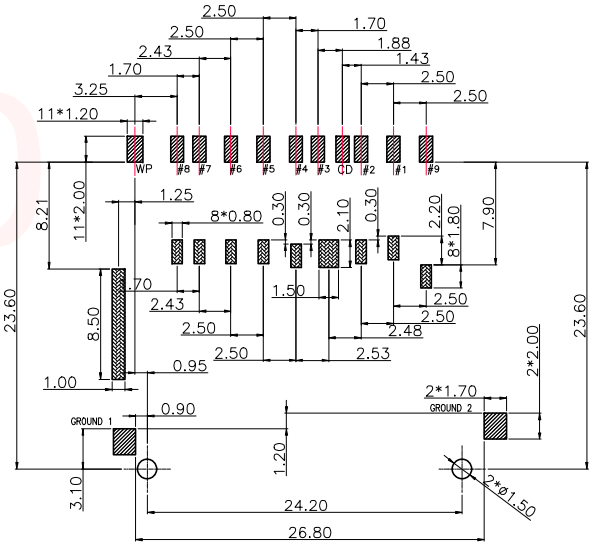

Welding area

prohibited layout area

Recommend PCB Layout Drawing

CIRCUIT:

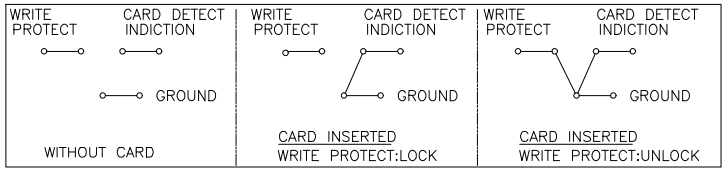

UNLESS OTHERWISE SPECIFED TOLERANCES

DECIMALS: X :±0.30, X.X :±0.20, X.XX :±0.10

ANGLES: X :±2°, X.X :±1°

东莞市汉博电子科技有限公司
DONGGUAN HANBO TECHNOLOGY CO. , LTD

TITLE	SD CARD PUSH PUSH 2.8H CONN.			
DWN	xiong	SD-111S		
CHKD	lee	SCALE:1:1	UNIT: mm	
APVD	wang	SIZE: A4	SHEET:1OF 1	REV: A4
CUSTOMER COPY				