Threshold 4.65V low power microprocessor reset circuit

HT813L microcircuit is purposed to check power supply and to start up microcontroller and microprocessor systems. It is applied to ensure regular standard operation of the circuit when the device is switched on\off and also when there is alarm emergency dropping of supply voltage.

Physically the microcircuit is made in 8-pin DIP & SO packages

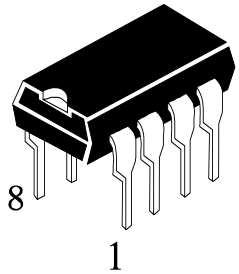

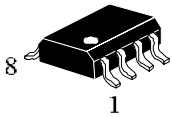

HT813LNZ	DIP
HT813LRZ	SOP

Features

- Standard supply voltage 5,0 V
- Operation temperature range T_A = from -40°to +85°C
- RESET signal generation when power supply is provided for regular start-up of microprocessor
- RESET signal generation when power supply is dropped below operation one to exclude incorrect operation of microprocessor.
- RESET signal generation when reset key is pressed
- Option of threshold voltage programming when RESET signal is generated

Microcircuit includes:

- reference voltage source
- two analog comparators
- guard timer
- digitizer, (digital sampler)
- digital delay

Functions performed

- RESET signal generation by fixed supply voltage level
- RESET signal generation from external RESET key
- Generation of guard timer state signal
  Alarm interrupt of host power supply

Block diagram

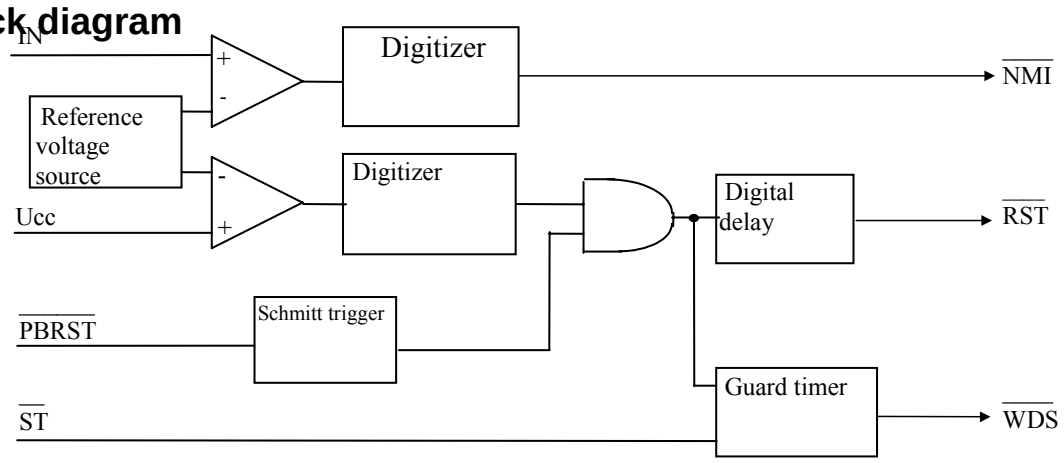

Pin description

Pin	Symbol	Name	Type
01	$\overline{PBRST}$	Push button Reset	Input
02	Ucc	Supply voltage	-
03	GND	Common pin	-
04	IN	input	Input
05	$\overline{NMI}$	Non-masked interrupt	Output
06	$\overline{ST}$	Strobe input	Input
07	$\overline{RST}$	Reset low reset	Output
08	$\overline{WDS}$	Watchdog status	Output

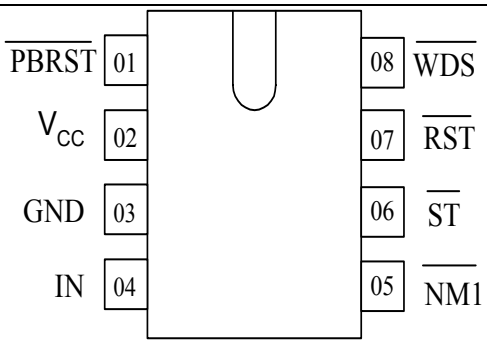

Operation temperature range

Operation temperature range от -40°C до +85°C.

MAXIMUM RATINGS*

Parameter, unit	Symbol	Recommended modes		Absolute maximum ratings	
		min	max	min	max
Supply voltage, V	V_{CC}	1.2*	5.5	-0.5	7.0
High level input voltage, V, $\overline{ST}$, $\overline{PBRST}$ inputs Vcc ≥ 2.4 V Vcc < 2.4 V	V_{IH}	2.0 Vcc - 0.5	Vcc + 0.3	–	Vcc + 0.5
Low level input voltage, V	V_{IL}	– 0.03	0.5	-0.5	–
Temperature range , °C	Ta	-40	85	-60	+125
* In the case supply voltage decreased down to 1,2V $\overline{RST}$ kept in active low state					

Electric features

Parameter, unit	Symbol	Mode	Norm		Temperature, °C
			min	max	
Low level leakage current on IN, uA	I_{LIL1}	Vcc = 5.5 B	–	-1.0	25 ± 10; -40; 85
Low level leakage current on $\overline{PBRST}$, uA	I_{LIL2}	Vcc = 5.5 B	-50	-450	
Low level leakage current on $\overline{ST}$, uA	I_{LIL3}	Vcc = 5.5 B	-10	-100	
High level leakage current on IN, $\overline{ST}$, $\overline{PBRST}$ inputs, uA	I_{LIH}	Vcc = 5.5 B	–	1.0	
Consumption current, uA	Icc	Vcc = 5.5 B	–	60	
		Vcc = 3.6 B		50	
Low level output current, mA	I_{OL}	Vcc ≥ 2.4 B V_{OL} = 0.4 B	10	–	
High level output voltage, B	V_{OH}	Vcc ≥ 2.4 B I_{OH} = -500 мкА	Vcc – 0.3	–	
V_{CC} trip point, V	V_{CCTP}	–	2.85	3.0	
In input trip point	V_{TP}	Vcc = 5.0 B	1.2	1.3	
Set up time of Reset on $\overline{PBRST}$ signal , ns	t_{PDLY}	Vcc = 5.0 B t_{PB} ≥ 150 нс*	–	250	
Hold on time of Reset on $\overline{PBRST}$ signal , ns	t_{RST}	Vcc = 5.0 B t_{PB} ≥ 150 нс*	130	285	
Hold on time of Reset on, Vcc, ms	t_{RPU}	Vcc = 5.0 B	130	285	
Watch dog time out	t_{TD}	Vcc = 5.0 B t_{ST} ≥ 10 нс**	1.0	2.2	

* t_{PB} – low level signal duration on $\overline{PBRST}$

** t_{ST} – low level signal duration on $\overline{ST}$

Dynamic parameters

U_{CC}= from 4,5 to 5,5V, T_A = from -40° to+85°C

Parameter symbol	Name	Norm		Unit
		not less	not more	
t_{TD}	Guard timer reflow time	1,0	2,2	s
t_{PDLY}	Setting time for reset by PBRST signal	-	250	ns
t_{RST}	Reset hold-in time by PBRST signal	130	285	ms
t_{RPD}	Setting time for reset by U_{CC}	-	8,0	mks
t_{RPU}	Hold-in time for reset by U_{CC}	130	285	ms
t_{IPD}	Interrupt setting time for IN input	-	8,0	mks
t_{PB}	Key press duration (PBRST= U_{IL})	150	-	ns
t_{ST}	Strobe pulse width	10	-	ns

Time diagrammes

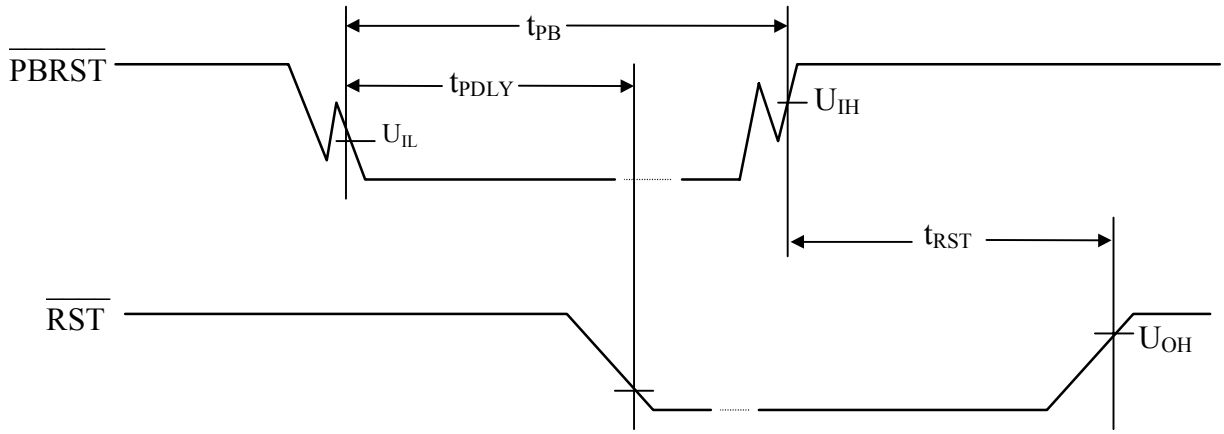

Fig.1 - Time diagramme of generation guard timer state signal.

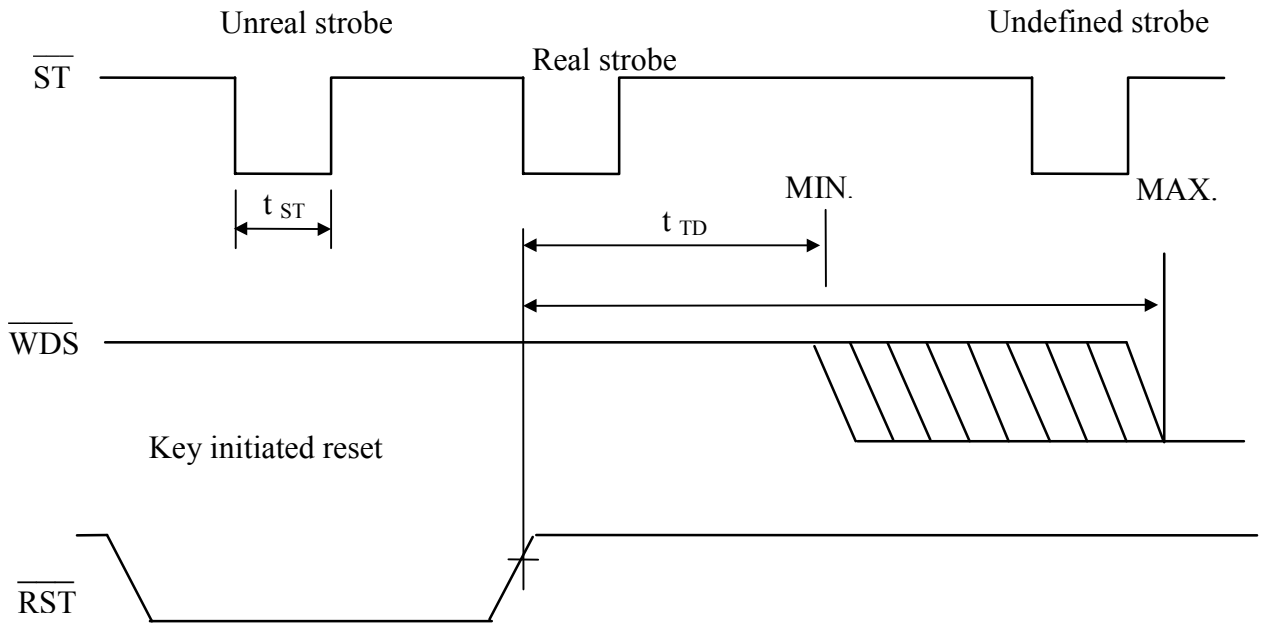

Fig.2 - Time diagramme of generation guard timer state signal (strobed input)

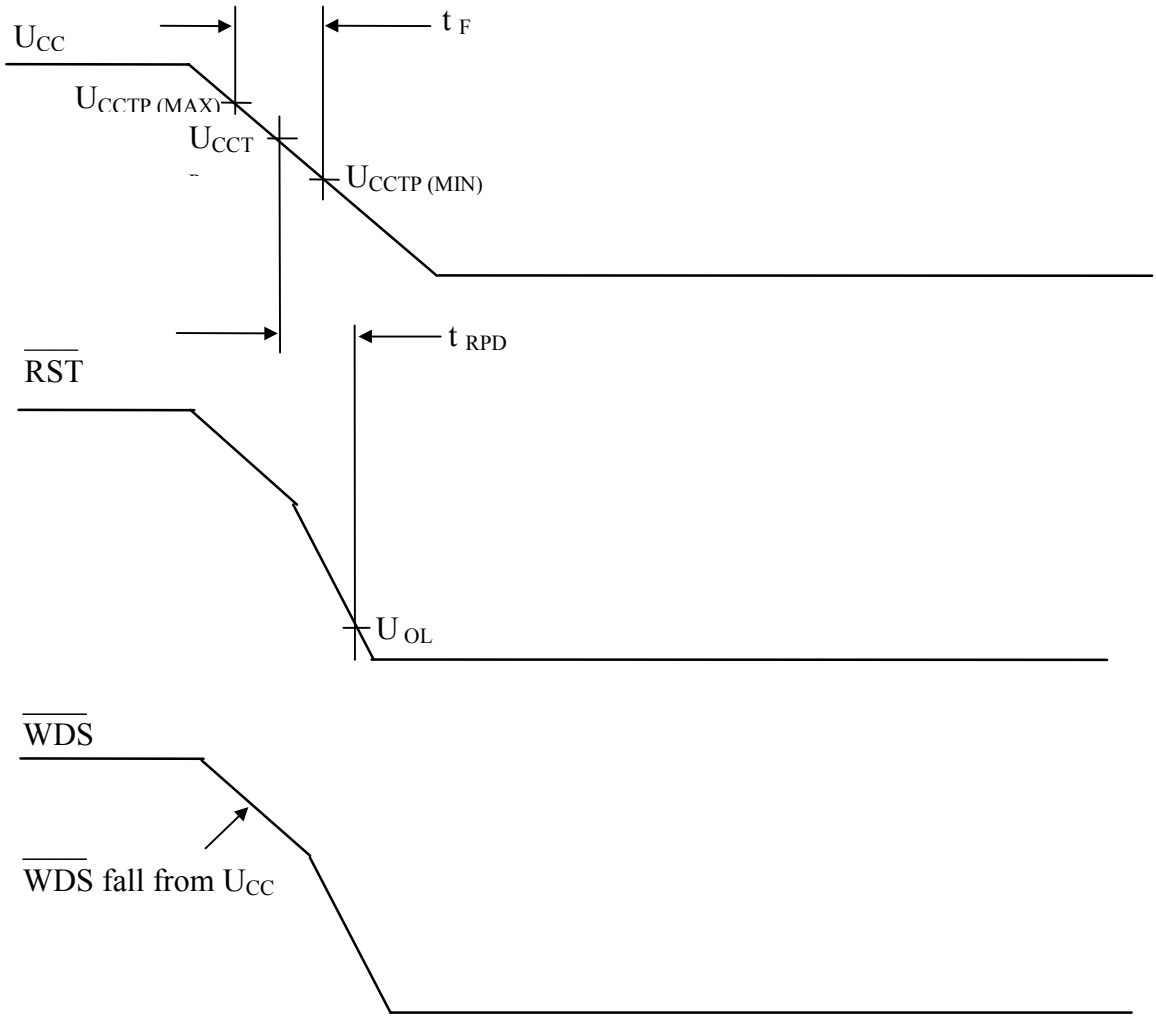

Fig. 3 - Time diagram of generation reset signal when power supply is dropped up to Ustrobe (power supply error)

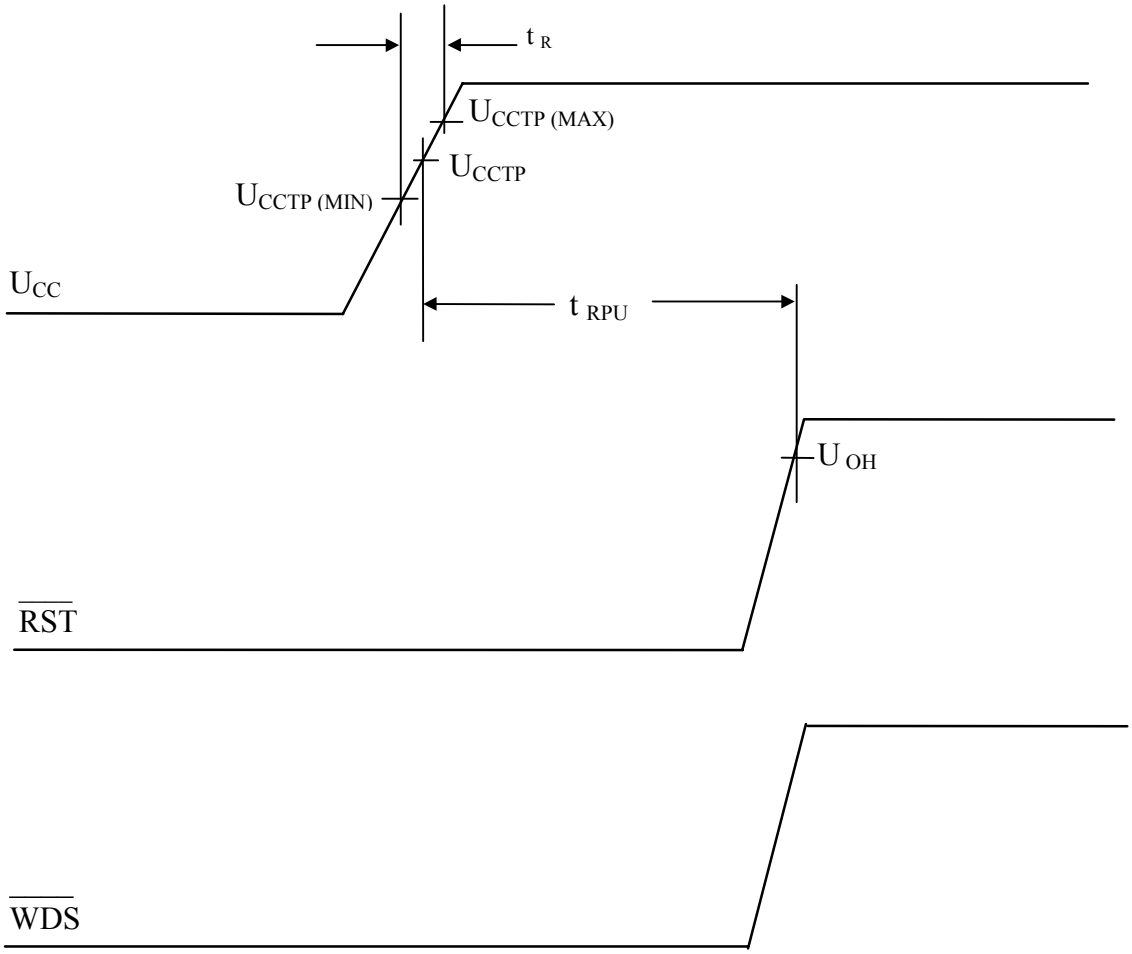

Fig. 4 - Time diagramme fo power supply connection (reset signal is reset active after power supply is transferred to stable state

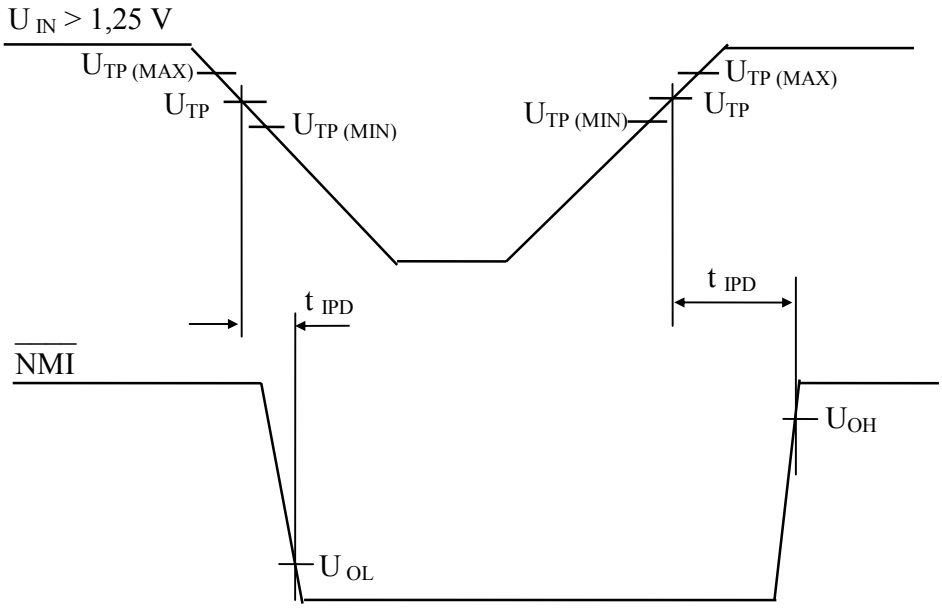

Fig. 5 - Time diagrammed of non-masked interrupt.

Mechanical Dimensions

Package

Dimensions in millimeters

8-DIP

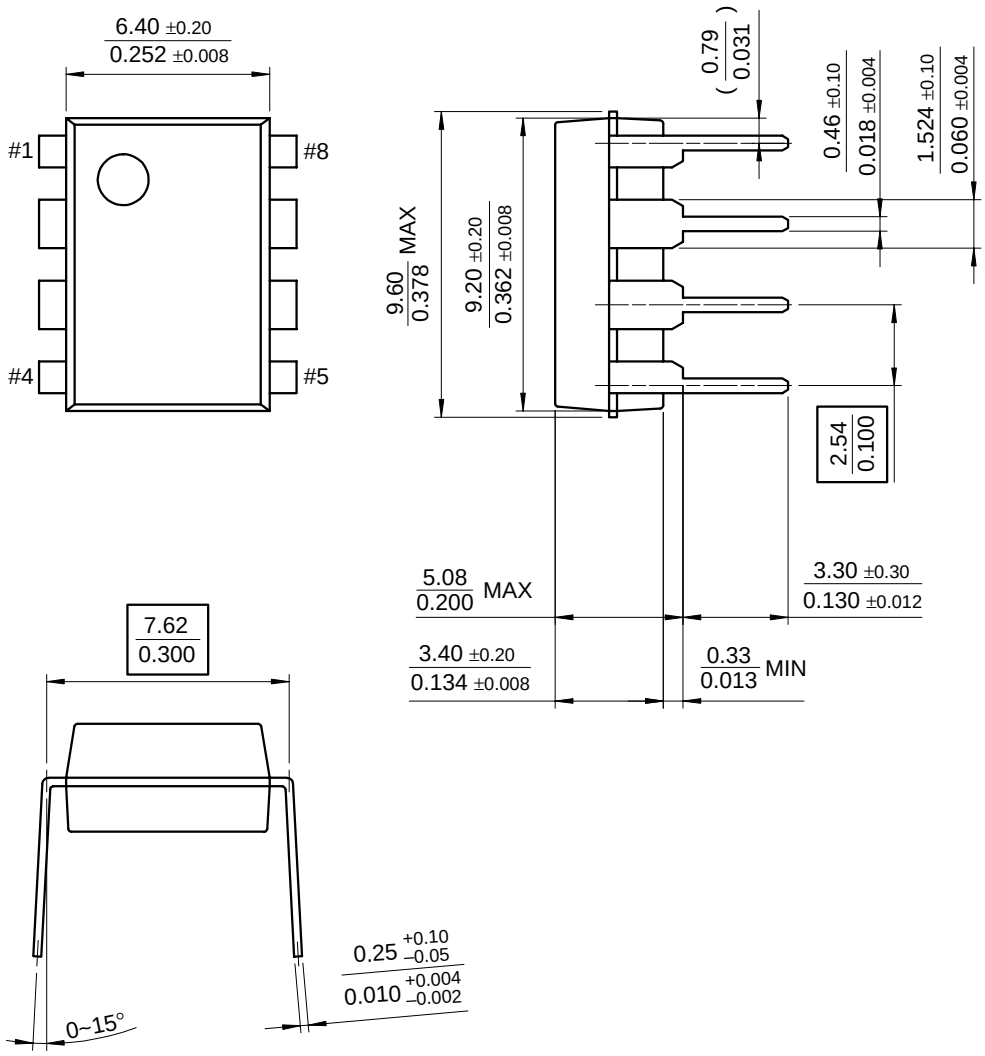

Mechanical Dimensions (Continued)

Package

Dimensions in millimeters

8-SOP