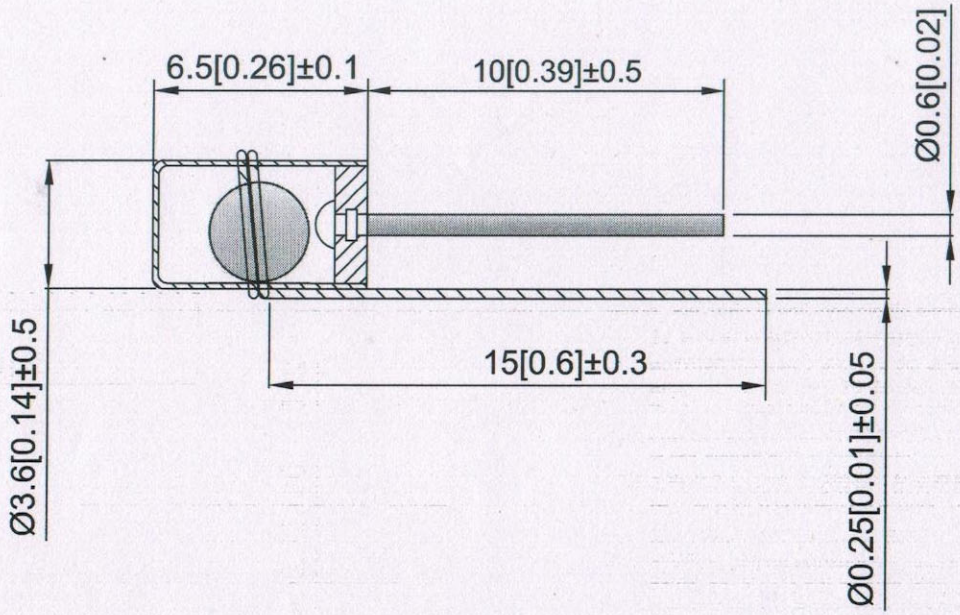

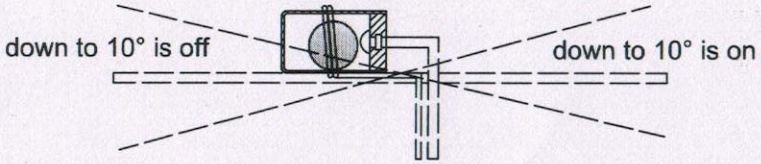

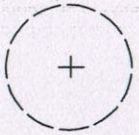

XKB Product features

Voltage: < 12V
Current: < 20mA
Conduction time: 2ms
Closed circuit resistance: < 1 ohm
Open circuit resistance: > 1 ohm
High temperature resistance: 120 degrees
Terminal tension: 500gf / min
Humidity: 25~95%RH
Operating life: 100000 times

1. Sw-105a is ball type single direction tilt inductive trigger switch.
1、Sw-105a为球型单向倾斜感应触发开关。
2. When the guide end (no pin end) of the product is inclined and the inclination angle is greater than 10 degrees, the product is in the open circuit (off) state; When the horizontal state of the product changes, the trigger end (gold-plated pin end) is lower than the horizontal and the tilt angle is greater than 10 degrees, the product is in the closed circuit (on) state.
2.当产品导向端（无销端）倾斜且倾斜角度大于10度时，产品处于开路（断开）状态；当产品水平状态发生变化时，触发端（镀金销端）低于水平且倾斜角度大于10度，产品处于闭路（on）状态。
3. When placed horizontally, shaking can be easily triggered; When there is no foot down, shaking is not easy to trigger.
3.水平放置时，易触发震动；没有脚的时候，不容易引起摇晃。
4. The product of this specification is completely sealed, waterproof and dustproof.
4.本规范产品完全密封、防水、防尘。
5. Under normal conditions, the service life of the switch can reach 100000 times.
5.正常情况下，开关使用寿命可达100,000次。
6. This product is made of environment-friendly metal material with stable performance. XKB
6、本产品采用环保型金属材料，性能稳定。

ITEM	PAPT NAMF	QTY	MATERIAL	FINISHING	REMARK
⑦					
⑥	Heat shrinkable tube	1	PET		
⑤	Spring	1	Phosphor copper	Tinning	
④	Rubber stopper	1	PLC		
③	BALL	1	Brass	Plate with silver	
②	PIN	1	Brass	Gold-plated	
①	Copper tube	1	Brass	Plate with silver	

广东星坤科技股份有限公司
生效 日期
文件工程章

MARK	DESCRIPTION	DATE	REVISED	APPROVED
ΔX				
ΔX				
ΔX				

REVISIONS

units: mm
tolerance:

X.X	±0.2mm
X.XX	±0.1mm
X.XXX	±0.05mm

UNSPECIFIED TOLERANCES

DSND		DATE		SCALE: N/A
DWN		DATE		VIEW:
CHKD		DATE		UNIT: mm/in
APPD		DATE		SIZE: A4

MODEL TYPE: Vibration switch
PART NO.:
DWG NO.: SW-105AC-10G

XKB INDUSTRIAL PRECISION CO.,LIMITED

WEIGHT	SHEET	REVISION
1.0g	1/1	A0

www.xk-dg.cn www.helloxkb.com www.helloxkb.cn