ROHS

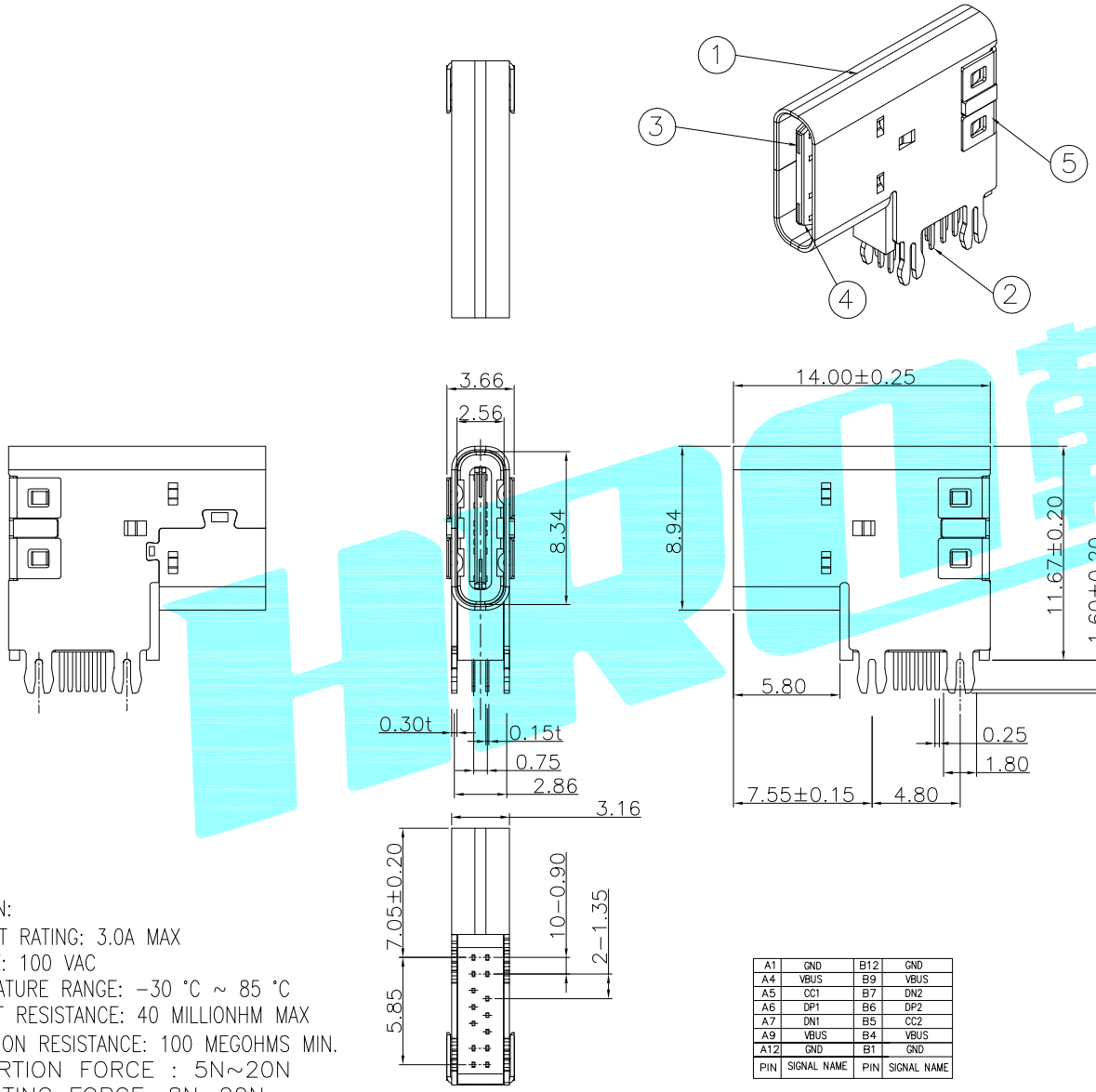

PCB板厚建议1.0~1.2MM

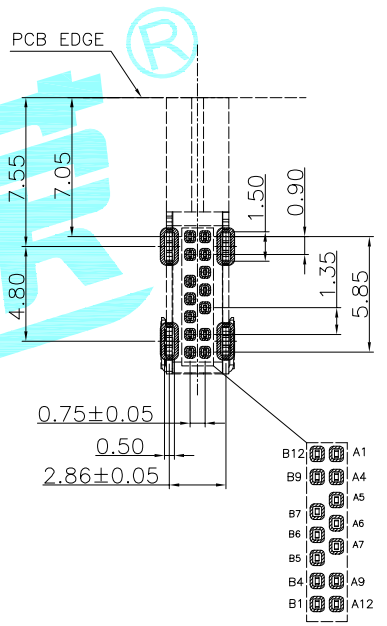

RECOMMENDED P.C.B. LAYOUT
TOLERANCE UNSPECIFIED ±0.05mm

NOTES:
SPECIFICATION:

1. CURRENT RATING: 3.0A MAX
2. VOLTAGE: 100 VAC
3. TEMPERATURE RANGE: −30 °C ~ 85 °C
4. CONTACT RESISTANCE: 40 MILLIONHM MAX
5. INSULATION RESISTANCE: 100 MEGOHMS MIN.
6. LNSERTION FORCE : 5N~20N
7. UNMATING FORCE: 8N~20N
8. DURABILITY: 10,000 CYCLES

PIN	SIGNAL NAME	PIN	SIGNAL NAME
A1	GND	B12	GND
A4	VBUS	B9	VBUS
A5	CC1	B7	DN2
A6	DP1	B6	DP2
A7	DN1	B5	CC2
A9	VBUS	B4	VBUS
A12	GND	B1	GND

NO.	DESCRIPTION	MATERIAL	REMARKS	QTY
5	COVER	STAINLESS STEEL	NI Plated	—
4	TYPE C MD	HIGH TEMPERATURE PLASTIC	BLACK	—
3	CENTER PIECE	STAINLESS STEEL	NO Plated	—
2	TYPE C TERMINAL	COPPER ALLOY	Gold Plated	—
1	SHELL	STAINLESS STEEL	Ni Plated	—

APPROVALS		DATE	HRO韩荣® ELECTRONICS CO.,LTD		
DRAWN	D.J.LV	2018/1/12			
CHECKED			TITLE:	USB CONNECTOR	
APPROVALS			PART NO.	TYPE−C−31−M−18	
TOLERANCES ARE	30~以上 ±0.30; 10~30 ±0.20; 5~10 ±0.15; ~ 5 ±0.10	ANGLE ±2°	UNIT: mm	SCALE: 1:1	PROJ:
			DRAWING NO.	—	SHEET 1 OF 1

ECN NO.	REV.	DATE.	DESCRIPTION.	CHANGE.	CHECK.	APPRO.
—	A	—	NEW	—	—	—