Version	Amendments	Modifier	ate Modified
A/0	新制订	杨国权	2019-4-03

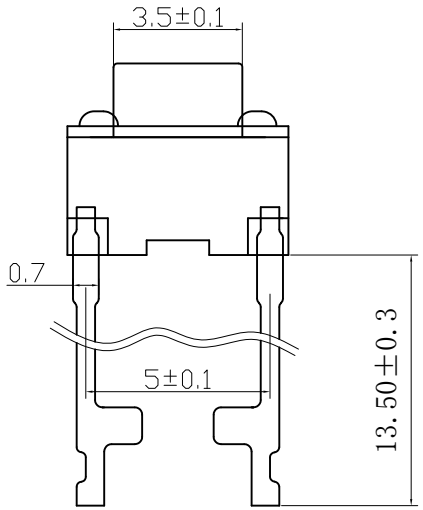

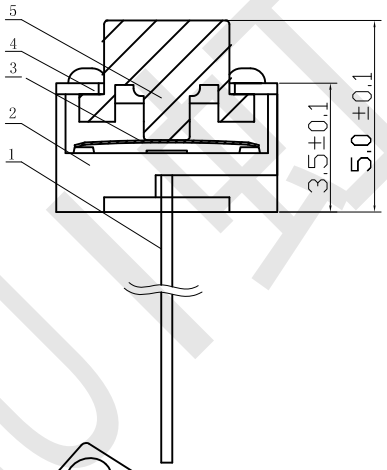

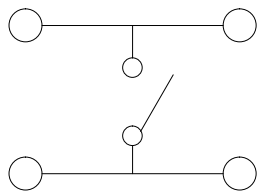

Circuit Diagram

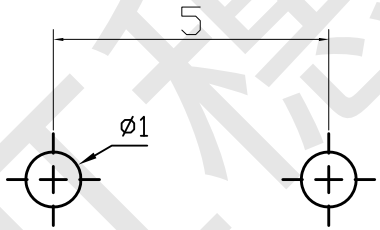

PCB.circuit prohibited area

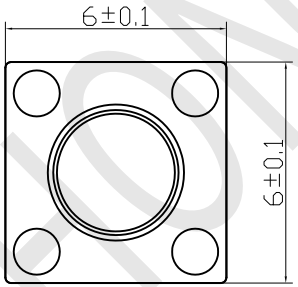

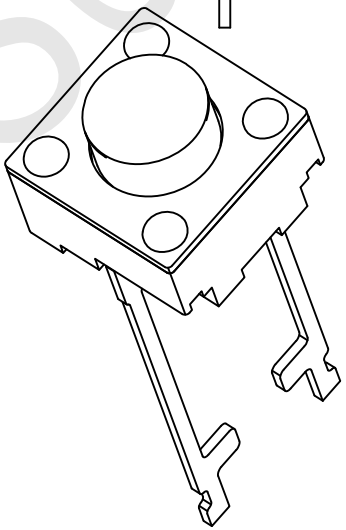

Remarks:

1. Rated current、Voltage: DC 12V 50mA
2. Contact resistance: ≤100mΩ
3. Insulation resistance: ≥100MΩ
4. The intensity of operations: 250±50gf
5. Life requirements: 100000次
6. Withstand voltage: AC 250V 1分钟
7. All materials comply with RoHS2.0 standards

NO.	PART NAME	MATERIAL	QTY	FINISHING	General	Tolerance
7						
6					≤1	±0.05
5	Button	PPA	1	Black	≤3	±0.10
4	Cover	Brass	1	Ni Plating	≤5	±0.15
3	Shrapnel	SUS	1	Ag Plating	>5	±0.25
2	Housing	PPA	1	Black	ANGLE	±3°
1	Terminal	Brass	4	Ag Plating		

DRAWN	ZHENGJIEMING			Product Name	Tact Switch
AFFIRM	YANGSHUSHENG			Model Number	TS60HD50B25B201
AUDITING				DATE	2018-08-19
SHEET	1:1	UNIT	mm		

ZHEJIANG HONGSUI PRECISION ELECTRONIC CO.,LTD