Version	ECM	Amendments	Modifier	Date Modified
A/0				

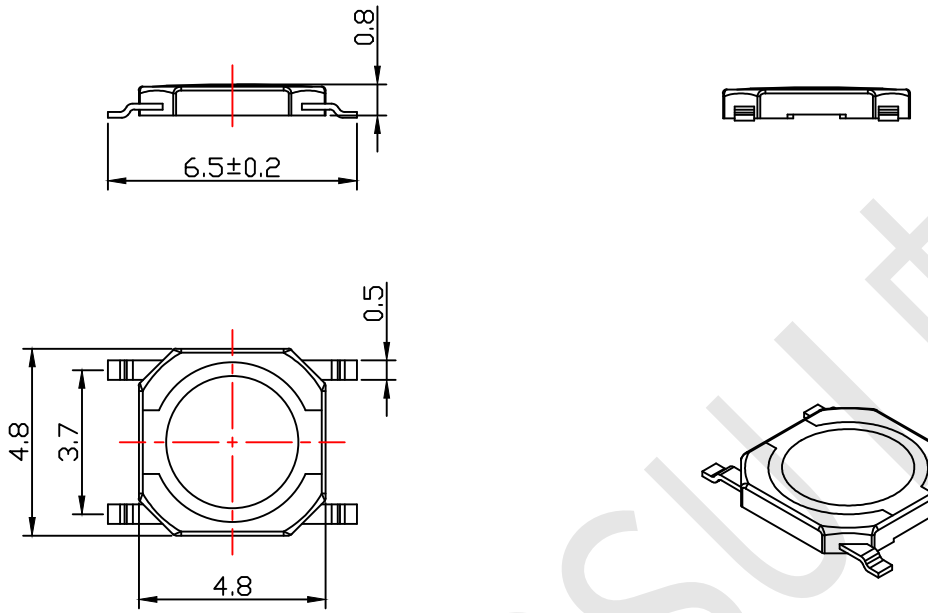

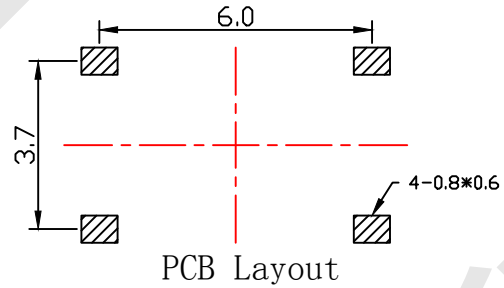

PCB Layout

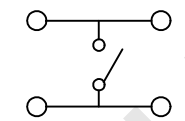

CIRCUITIDIAGRAM

Remarks:
1. Rated current、Voltage: DC 12V 50mA
2. Contact resistance: ≤100mΩ
3. Insulation resistance: ≥100MΩ
4. The intensity of operations: 200±50 gf
5. Life requirements: 100000次
6. Withstand voltage: AC250V 1分钟
7. All materials comply with RoHS2.0 standards

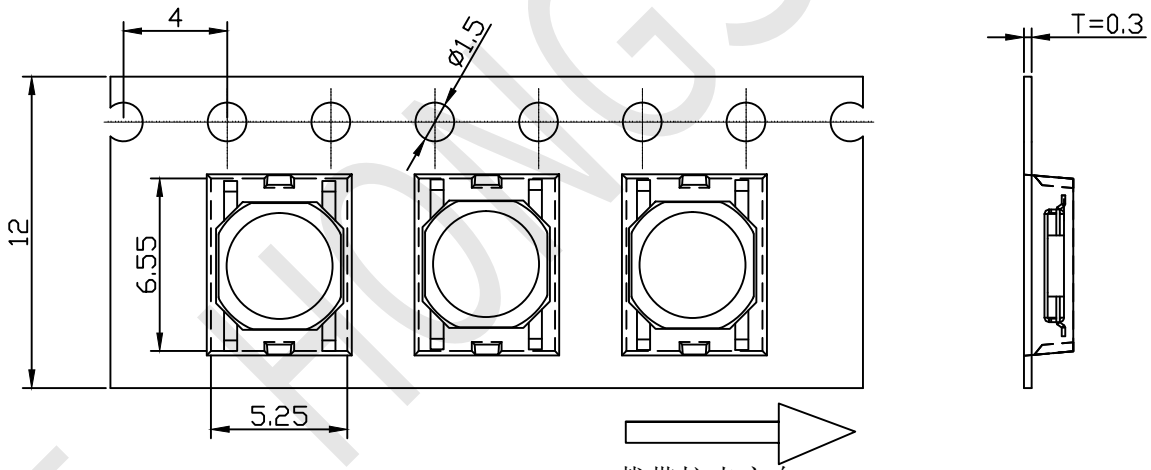

载带拉出方向

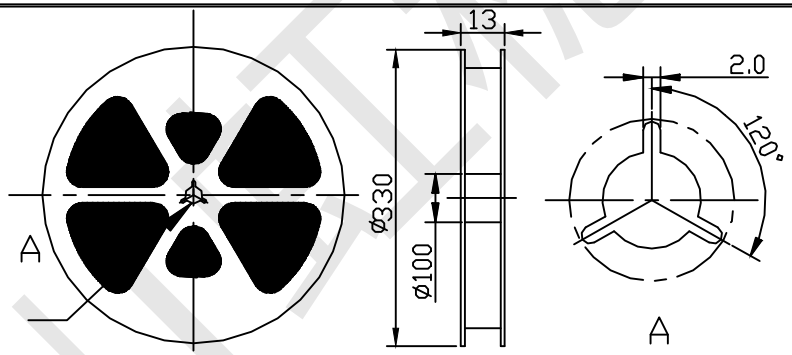

备注：1、每卷编带数量是5000pcs.
2、编带过程中，不可造成载带对折或压伤。
3、注意卷带方向，依顺时针方向拉出载带，载带打点孔在上方或右边。

NO.	PART NAME	MATERIAL	QTY	FINISHING
5				
4	Paster	polyamid membrane	1	yellow
3	Terminal	Phosphor copper	4	Ag Plating
2	Housing	LCP	1	Black
1	Shrapnel	SUS301	1	Ag Plating

General	Tolerance
X≤1	±0.05
1≤X≤5	±0.10
5≤X≤10	±0.15
X>10	±0.25
ANGLE	±3°

DRAWN	YANGGUOQUAN	Product Name	Tact switch
AFFIRM	YANGMIAO	Model Number	TS52AA80A20B011
AUDITING		DATE	2019-07-31
SHEET	1:1	UNIT	mm

ZHEJIANG HONGSUI PRECISION ELECTRONIC CO.,LTD