REVISIONS					
REV	NUMBER	DESCRIPTION	DWN	CHK	DATE
A		DESIGN			

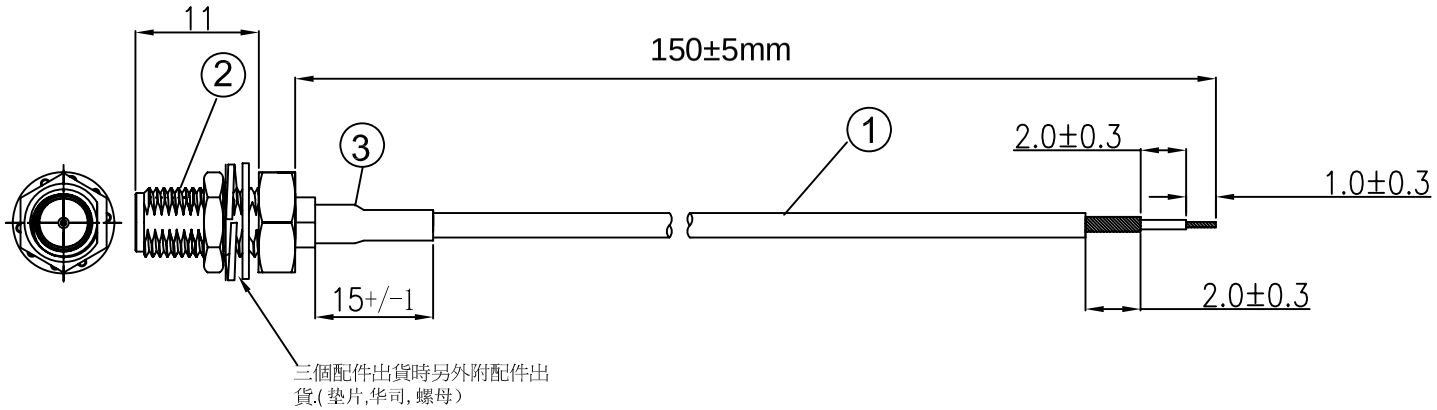

NOTES:

1. ELECTRICAL:
1.1. VOLTAGE RATING:DCV 300V 10MS
1.2. CONDUCTANCE RESISTANCE: 3.0 OHM/MAX.
1.3. INSULATION RESISTANCE: 5.0M OHM/MIN.
1.4. THE CABLE SHOULD BE 100% ELECTRICAL TEST
1.5. IT SHOULD BE NO ANY OPEN/SHORT, MISWIRING AND INTERMITTENT FAILURES.
2. MATERIAL:
2.1. SEE TABLE
3. ALL COMPONENTS ARE RoHS COMPLIANT.

ITEM NO.	PART NUMBER	DESCRIPTION	QTY.
③	套管	黑色热缩套管，OD:2.0MM	AS
②	接头	SMA母头母针，分体，11牙，镀金	1
①	同轴线	RF 178棕色线,OD:1.8 mm	AS

深圳市金航标电子有限公司 WWW.BDS666.COM

型号：KH-122-178SMA-150 0755-83044319

ALL DIMENSION ARE IN MM

COMPUTER GENERATED IN SOLIDWORKS

DO NOT SCALE THIS DRAWING

DRAWN	Jamy	DATE 2020-06-15
ENG.		
MFG.		
Q.A.		

SMA /F TO OPEN L=150 mm

PROJECTION

GENERAL TOLERANCE FOR

ANGLES	X.X	X.XX	X.XXX
± 1°	± 0.3	± 0.25	± 0.150

CUSTOMER P/N:

SIZE	Number	REV
B		A

SCALE: Free | TYPE | SHEET 1 OF 1