RoHS

SPECIFICATIONS
Rated Current:3.0AMP
Contact Resistance:20mΩ Max
Withstand Voltage:1000V AC/DC
Insulation Resistance:1000MΩ Min
Operation Temperature:−40°c to +105°c

Contact Material:Brass
Contact Plating:Au Over Ni
Insulator Material:Polyester(UL94V−0)
Standard: PA6T
Max.Processing Temp: 230°C for 30−60 seconds
(260°C for 10 seconds)

Recommended P.C.B Layout(Top Side)
(PCB BOARD TOLERANCE±0.05)

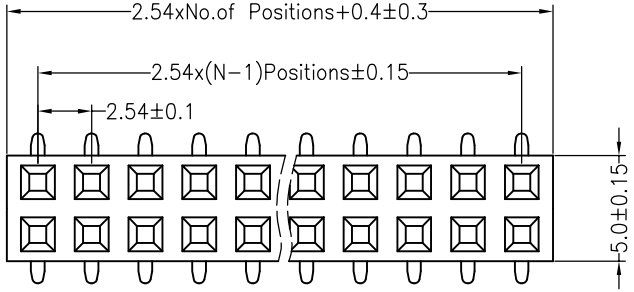

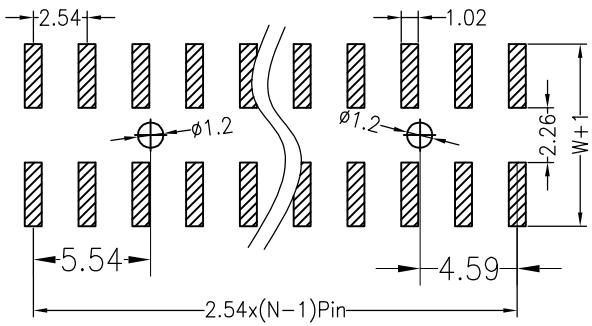

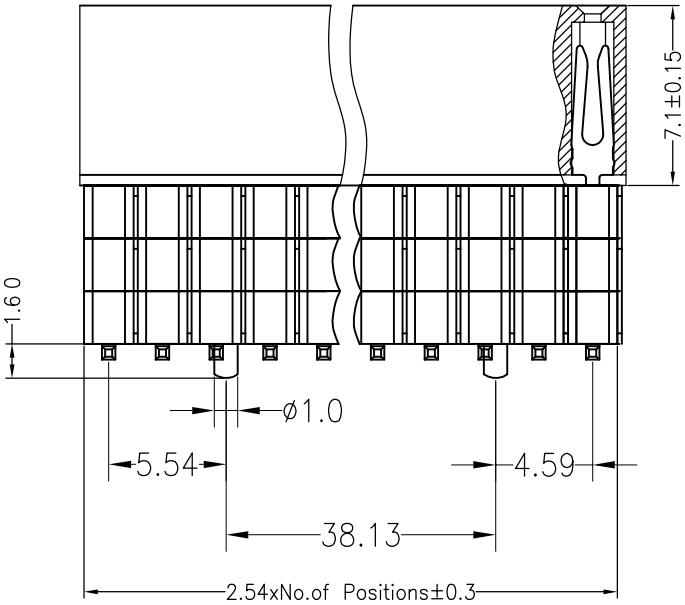

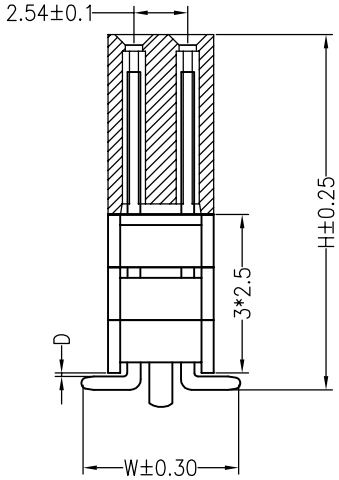

Dimension antitheses list			
ITEM	H	D	W
Alternate	15.00	0	8.20

REV	DATE	MODIFICATION DESCRIPTION	CHANGE
A0	2012.10.08	NEW DRAWING	

OPERATION				
X.X	±0.30	DRAW		
X.XX	±0.20	CHECK		
X.XXX	±0.10			
Angle	±3°	APPROVE		
DIM	TOL			

SCALE	FIT
UNIT	mm
SIZE	A4
SHEET	1/1
PROJ.	

深圳市连盛精密连接器有限公司

PART NO.	FH-00265---A0001
TITLE:	2.54FH H7.1mm+3H2.5mm 2x20pin SMT W5.0mm 带偏柱 直径1.0 高1.6