RoHS

SPECIFICATIONS
Rated Current:3.0AMP
Contact Resistance:20mΩ Max
Withstand Voltage:1000V AC/DC
Insulation Resistance:1000MΩ Min
Operation Temperature:−40°c to +105°c

Contact Material:Brass
Contact Plating:Au Over Ni
Insulator Material:Polyester(UL94V−0)
Standard: PBT
Max.Processing Temp: 180°C for 30−60 seconds
(200°C for 10 seconds)

Recommended P.C.B Layout(Top Side)
(PCB BOARD TOLERANCE±0.05)

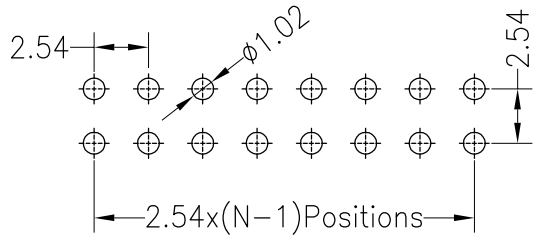

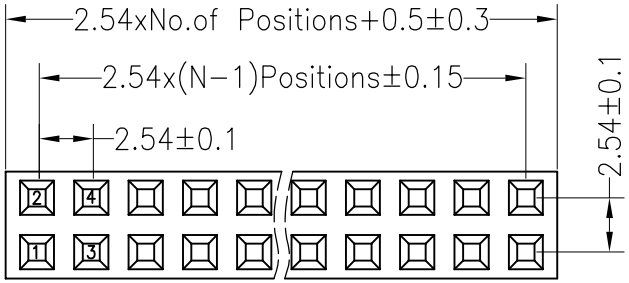

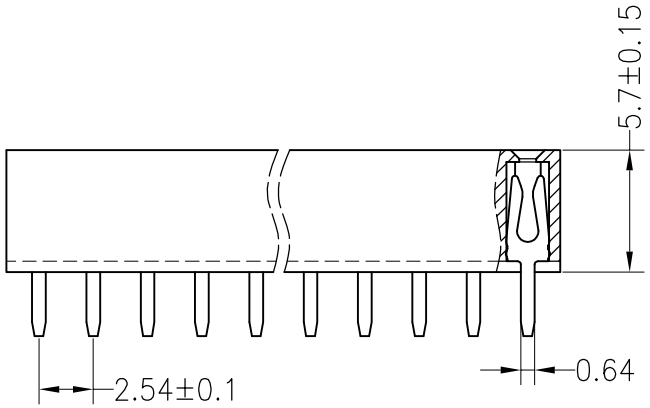

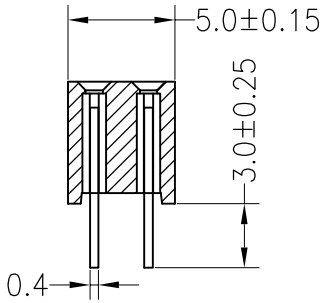

REV	DATE	MODIFICATION DESCRIPTION	CHANGE
A0	2012.04.26	NEW DRAWING	

OPERATION	
X.X	±0.30
X.XX	±0.20
X.XXX	±0.10
Angle	±3°
DIM	TOL

DRAW			
CHECK			
APPROVE			

SCALE	FIT
UNIT	mm
SIZE	A4
SHEET	1/1
PROJ.	

深圳市连盛精密连接器有限公司

PART NO.	FH-00094
TITLE:	2.54FH H5.7mm 2x15pin 180° DIP