RoHS

SPECIFICATIONS
Rated Current:3.0AMP
Contact Resistance:20mΩ Max
Withstand Voltage:1000V AC/DC
Insulation Resistance:1000MΩ Min
Operation Temperature:−40°c to +105°c

Contact Material:Brass
Contact Plating:Au Over Ni
Insulator Material:Polyester(UL94V−0)
Standard: PBT
Max.Processing Temp: 180°C for 30−60 seconds
(200°C for 10 seconds)

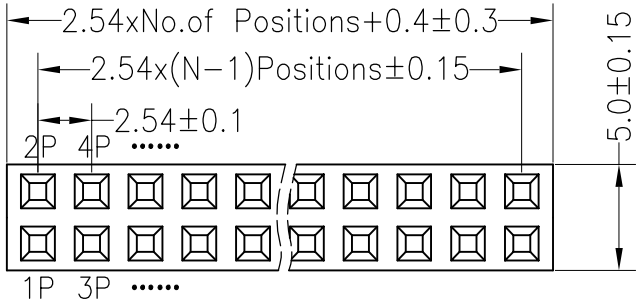


Recommended P.C.B Layout(Top Side)
(PCB BOARD TOLERANCE±0.05)

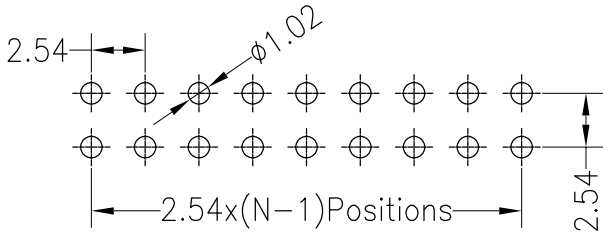


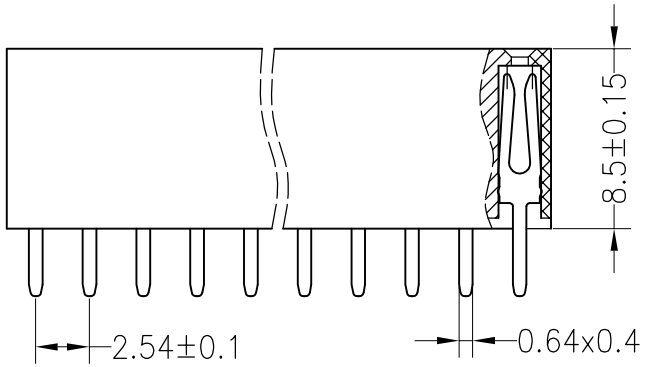


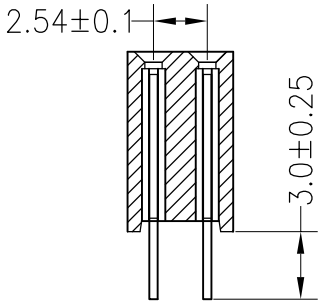


| REV | DATE | MODIFICATION DESCRIPTION | CHANGE |
|---|---|---|---|
| A0 | 2012.03.28 | NEW DRAWING | |

| OPERATION | |
|---|---|
| X.X | ±0.30 |
| X.XX | ±0.20 |
| X.XXX | ±0.10 |
| Angle | ±3° |
| DIM | TOL |

DRAW
CHECK
APPROVE

| | |
|---|---|
| SCALE | FIT |
| UNIT | mm |
| SIZE | A4 |
| SHEET | 1/1 |
| PROJ. | |

深圳市连盛精密连接器有限公司

PART NO. FH-00077

TITLE: 2.54FH H8.5 2x25pin 180° W5.0mm