MAPX	MODIFICATION	DATE

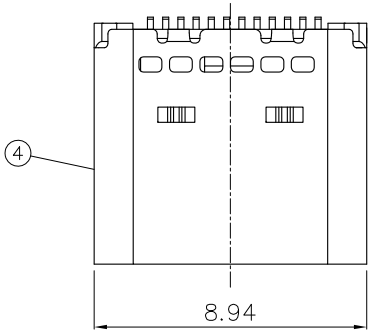

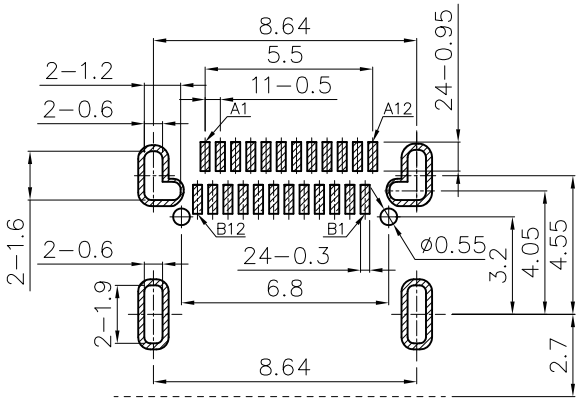

RECOMMENDED P.C.B. LAYOUT
TOLERANCE UNSPECIFIED ±0.05mm

NOTES:
1.MECHANICAL PERFORMANCE,
1−1.INSERTION FORCE: 5N~20N.
1−2.REMOVAL FORCE: 5N~20N.
1−3.DURABILITY: 10000 CYCLES.
2.ELECTRICAL PERFORMANCE,
2−1. CURRENT RATING: 3.0A
VOLTAGE RATING: 5.0V
2−2. LLCR: VBUS & GND PINS AND OTHER PINS: 40mΩ/PIN MAX.SHIELD: 50mΩ/MAX.
2−3.INSULATION RESISTANCE: 100MΩ MIN
2−4.DIELECTRIC WITHSTAND VOLTAGE,AC 100V FOR 1 MINUTE.
3.ENVIRONMENTAL PERFORMANCE:
OPERATING TEMPERATURE: −25°C~+85°C.

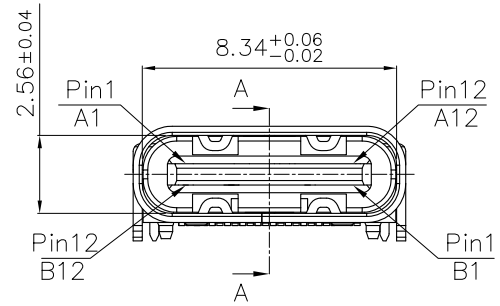

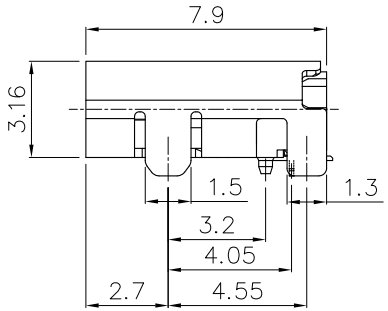

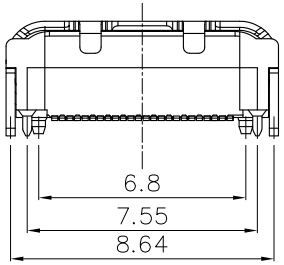

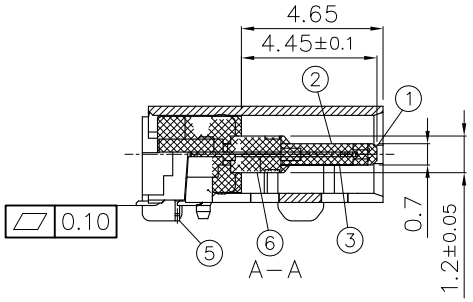

PIN ASSIGNMENTS:

PIN No.	A1	A2	A3	A4	A5	A6	A7	A8	A9	A10	A11	A12
SIGNAL NAME	GND	TX1+	TX1−	Vbus	CC1	D+	D−	SBU1	Vbus	RX2−	RX2+	GND
PIN No.	B12	B11	B10	B9	B8	B7	B6	B5	B4	B3	B2	B1
SIGNAL NAME	GND	RX1+	RX1−	Vbus	SUB2	D−	D+	CC2	Vbus	TX2−	TX2+	GND

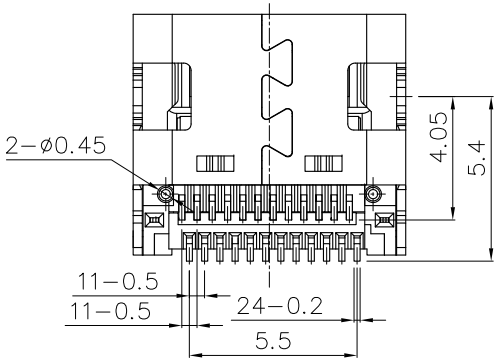

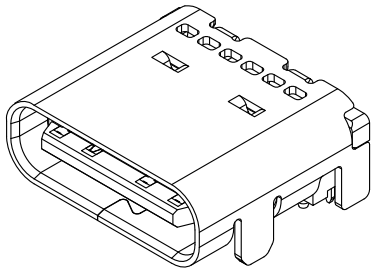

NO.	PART NAME	QTY.	MATERIAL	REMARK
⑥	EMI PLATE	2 PCS	STAINLESS STEEL T=0.10	————
⑤	MID PLATE	1 PCS	STAINLESS STEEL T=0.15	Soldering Plating: Sn
④	SHELL	1 PCS	STAINLESS STEEL T=0.3	Ni
③	TERMINAL 2(12Pin)	1SET	COPPER ALLOY T=0.15	Under Plating: Ni Contact Plating: Au Soldering Plating: Sn
②	TERMINAL 1(12Pin)	1SET	COPPER ALLOY T=0.15	
①	HOUSING	1 PCS	HIGH TEMP.THERMOPLASTIC UL94V−0	BLACK

产品图
PRODUCT CHART DWG

公差一览表
TOLERANCE UNLESS OTHERMSE

X.	±0.30	X.	±5.°
.X	±0.25	.X	±2.°
.XX	±0.15	.XX	±1.°
.XXX	±0.10	.XXX	±0.5°

深圳市精拓金电子有限公司

单位 UNITS	MM	制图 DRAWING	YANG	制图料号 PRODUCT PART NO.	918−318K2023F40003		
比例 SCALE	1:1	审核 CHKD	郭志富	产品名称 PRODUCT NO	TYPE−C3.1板上型母座四脚插板L7.9有柱双排SMT/LCP黑胶 24PIN		
日期 DATE	2019.11.23	核准 APPD	黄国荣	角法 VIEW		版本 VER	A0