© 2020 TE Connectivity. All Rights Reserved.

REVISIONS					
P	LTR	DESCRIPTION	DATE	DWN	APVD
	J	REVISED PER ECR 06-014360	17AUG2006	DLD	DCS
	K	REVISED PER ECR 07-013476	08JUN2007	DLD	DCS
	K1	REV PER ECR-10-012906	24JUL2010	VSS	DZ
	K2	REVISED PER ECO-20-012415	10SEP2020	AP	CM

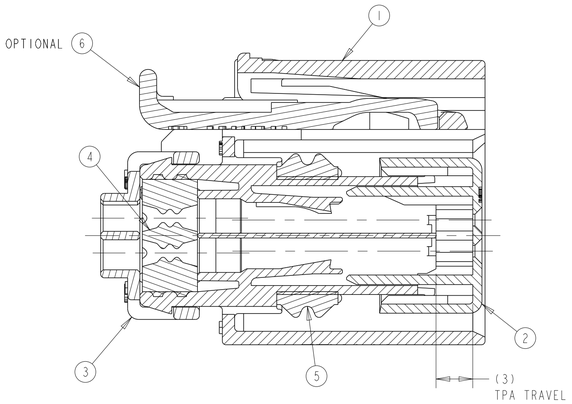

SECTION A-A
SHOWN WITH TPA
AND CPA (OPTIONAL) IN
THEIR PRE-LOADED POSITIONS
(DELIVERY CONDITION)

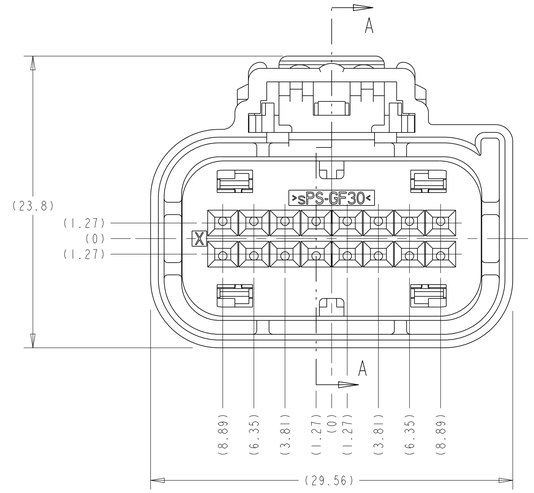

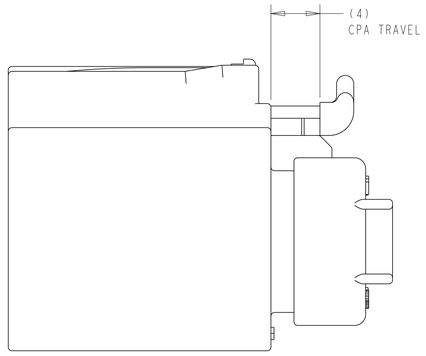

CHART 1																	
	2		4		6		8	9		11		13		15		~~1438031-6~~ 9
	2		4		6			9		11		13		15		1438031-5
																5-1419168-8 5-1419168-9 ~~6-1419168-0~~ ~~6-1419168-1~~ 1438031-1 1438031-2 1438031-3 1438031-4
1	2	3	4	5	6	7	8	9	10	11	12	13	14	15	16	
TERMINAL HOLE POSITION																ASSEMBLY PART NUMBER
CAVITIES WITH A NUMERIC SYMBOL INDICATE CLOSED TERMINAL HOLE POSITIONS																
BLANK CAVITIES INDICATE OPEN TERMINAL HOLE POSITIONS																

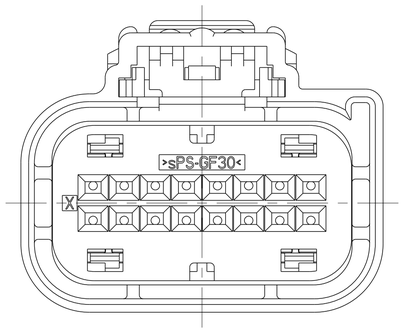

KEYING OPTION "A"

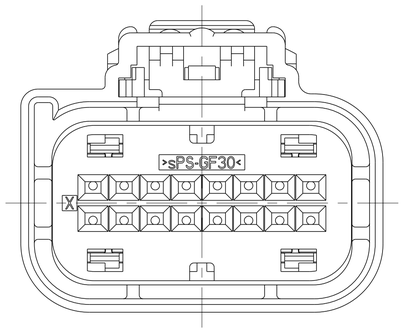

KEYING OPTION "B"

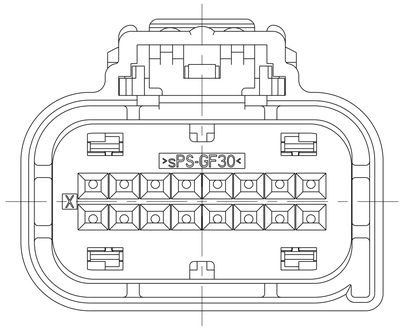

KEYING OPTION "C"

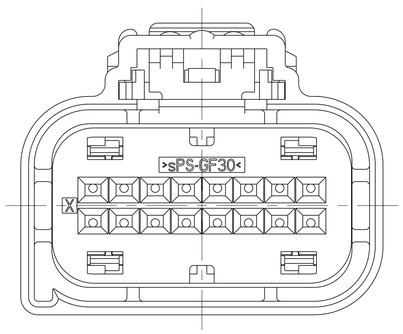

KEYING OPTION "D"

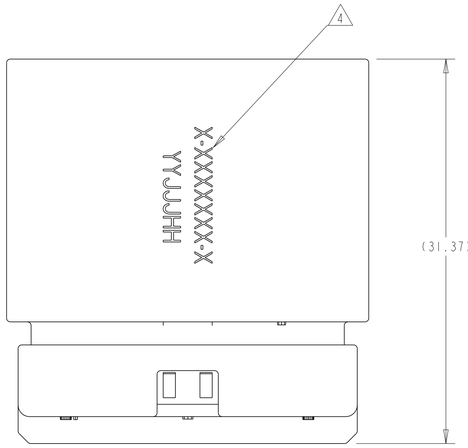

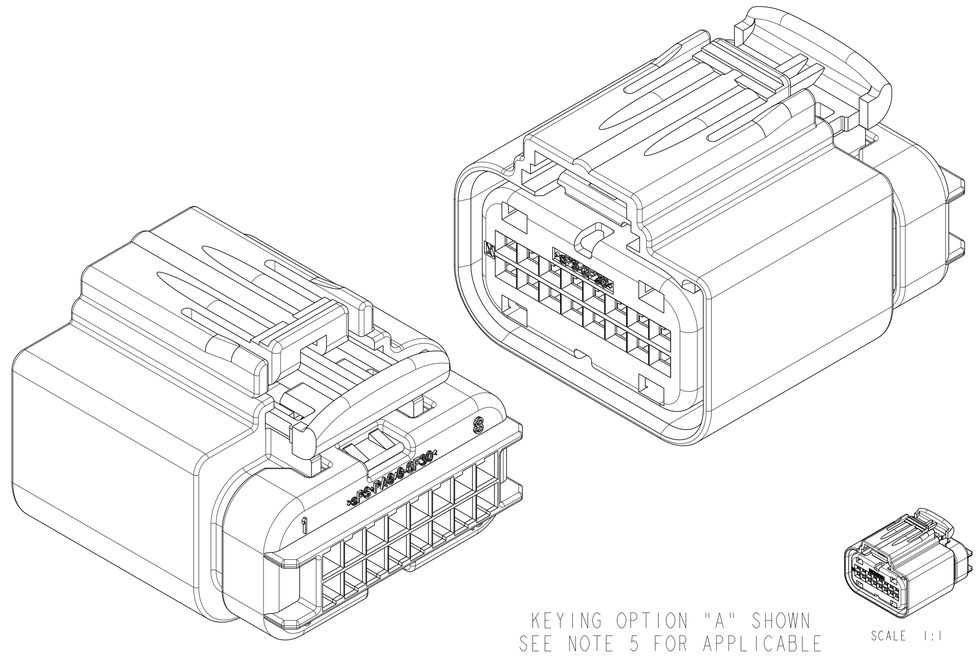

KEYING OPTION "A" SHOWN
SEE NOTE 5 FOR APPLICABLE
HEADER INTERFACE INFORMATION

SCALE 1:1

1. APPLICABLE TERMINAL PART NUMBERS (SOLD SEPARATELY):
   FOR TIN APPLICATIONS: 1393367 AND 1393366.
   FOR GOLD APPLICATIONS: 1393365 AND 1393364.
   FOR TERMINATION AND REELING OPTIONS
   SEE DRAWINGS 1393367, 1393366, 1393365, AND 1393364.

2. COMPATIBLE WIRE SIZES FOR MAT SEAL DESIGN 1.19 TO 2.06 O.D.
   (22-18 AWG, 0.35-0.75 mm^2)

3. TPA IS SHIPPED IN PRE-LOADED POSITION. SOME TPA'S MAY BECOME FULLY SEATED DURING SHIPPING. USE TYCO INSTRUCTION SHEET 408-10128 TO REPOSITION TPA TO IT'S PRE-LOADED POSITION.

4. TE ASSEMBLY PART NUMBER (X-XXXXXXX-X) AND TRACEABILITY CODE (YY = TWO DIGIT YEAR, JJJ = JULIAN DAY, HH = TWO DIGIT MILITARY HOUR) ARE PRINTED IN THIS LOCATION.

5. APPLICABLE HEADER INTERFACE DRAWING 1488345 IS AVAILABLE UPON REQUEST. A COPY OF THIS DRAWING CAN BE OBTAINED FROM THE TYCO ELECTRONICS PRODUCT MANAGER, VIA YOUR TYCO ELECTRONICS SALES REPRESENTITVE OR CUSTOMER SERVICE.

6. PART ASSEMBLY WEIGHT WITHOUT TERMINALS:
   WITHOUT CPA: xx.xx GRAMS
   WITH CPA: xx.xx GRAMS

7. ASSEMBLIES ARE BULK PACKAGED.

8. OPTIONAL CPA IS SHIPPED IN IT'S PRE-LOADED POSITION.

9. OBSOLETE PART

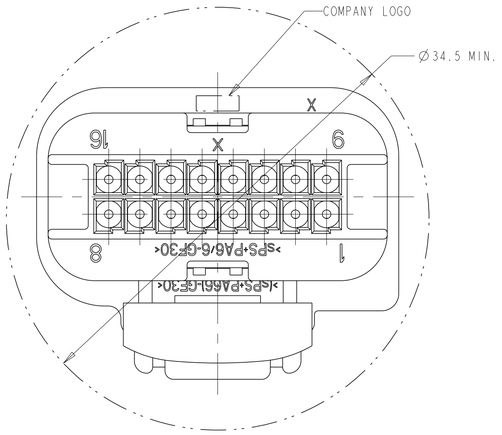

MINIMUM FEED THROUGH CONDITION
WITH 1mm CLEARANCE ALL AROUND

1438031-4	1438031-3	1438031-2	1438031-1	~~6-1419168-1~~	~~6-1419168-0~~	5-1419168-9	~~1438031-6~~ 9	1438031-5	5-1419168-8	<--- ASSEMBLY PART NUMBERS			
				1	1	1	1	1	1	6	CPA	PBT-GF15	RED
1	1	1	1	1	1	1	1	1	1	5	PERIMETER SEAL	SILICONE	TURQUOISE
1	1	1	1	1	1	1	1	1	1	4	GROMMET	SILICONE	BROWN
1	1	1	1	1	1	1	1	1	1	3	COVER	sPS-GF30	BLACK
1	1	1	1	1	1	1	1	1	1	2	TPA	sPS-GF30	RED
1				1						1	PLUG WITH KEYING OPTION "D"	(sPS+PA66)-GF30	BLACK
	1				1					1	PLUG WITH KEYING OPTION "C"	(sPS+PA66)-GF30	BLACK
		1				1				1	PLUG WITH KEYING OPTION "B"	(sPS+PA66)-GF30	BLACK
			1				1	1	1	1	PLUG WITH KEYING OPTION "A"	(sPS+PA66)-GF30	BLACK
QUANTITY										ITEM	DESCRIPTION	MATERIAL	COLOR/FINISH

THIS DRAWING IS A CONTROLLED DOCUMENT.

DIMENSIONS: mm

TOLERANCES UNLESS OTHERWISE SPECIFIED:
0 PLC ±
1 PLC ±0.3
2 PLC ±0.10
3 PLC ±
4 PLC ±
ANGLES ±3°

MATERIAL -
FINISH -

DWN M. FORISKA 03DEC2001
CHK M. FORISKA 03DEC2001
APVD A. SHUMAN 03DEC2001
PRODUCT SPEC -
APPLICATION SPEC -
WEIGHT SEE NOTE 6

TE Connectivity

NAME 2x8 SEALED, FEMALE PLUG ASSEMBLY CUSTOMER SPEC.

SIZE A1 | CAGE CODE 00779 | DRAWING NO C-5-1419168-8 | RESTRICTED TO

CUSTOMER DRAWING | SCALE 4:1 | SHEET 1 OF 1 | REV K2

4805 (3/13)