REV.	ECN NO.	REVISED	DATE

RoHs 环保

H型

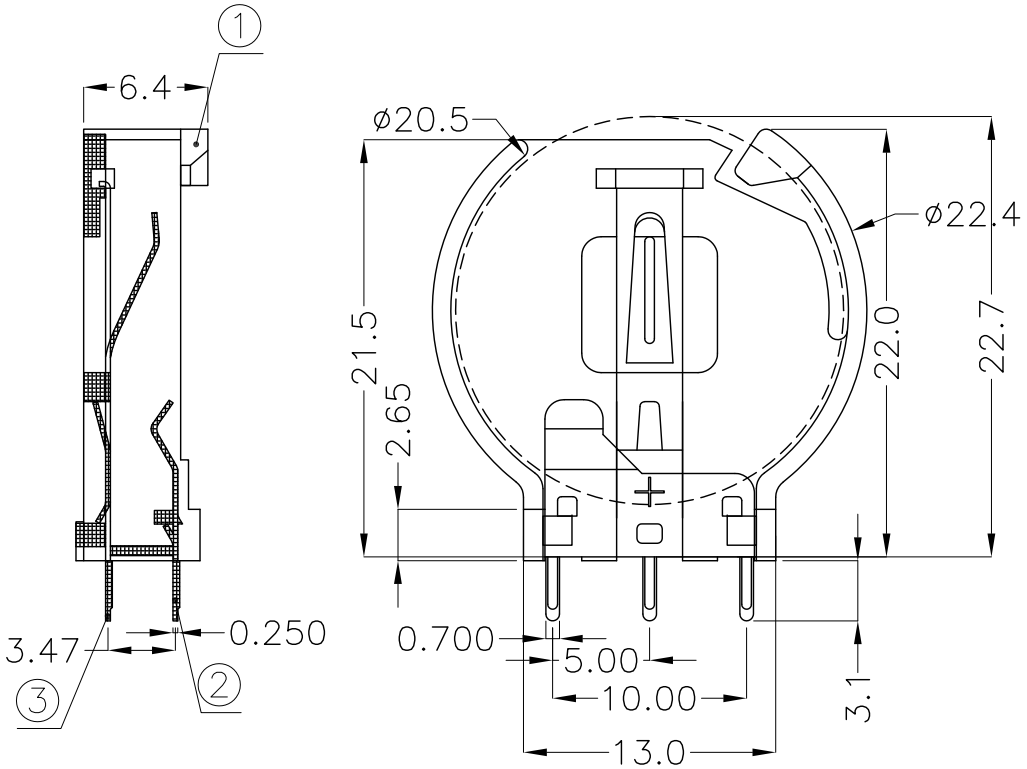

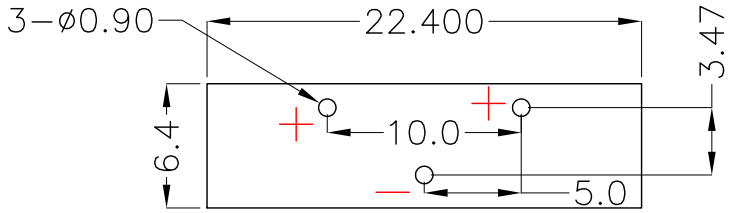

PCB Layout Diagram
Top View

NOTE:
1.MATERIAL:
a.HOUSING:PA66 UL94V-0
b.CONTACT:PHOSPHOR BRONZE
(SURFACE PLATING: Ni100u"-120u")
SEE ORDERING INFORMATION
2.ELECTRIC:
a.CONTACT RESISTANCE: 30 MILLIOHMS MAX
b.INSULATION RESISTANCE: 1000 MEGA OHMS MIN
c.DIELECTNIC VOLTAGE: 500V AC ONE SEC LEVEL
d.OPERATING TEMPERATURE: -55°C~ +105°C

ORDERING INFORMATION

BS-05-A***003

电池座系列

BS-05系列

DIP 90° TYPE

PLATING:
A-Au1U"
J-Ni100U"~120U"
K-Sn100U"~120U"

MATERIAL:
1A-PBT BLACK
1B-PA66 BLACK
2A-PPA BROWN
2B-PPA BLACK
3A-PPS BROWN
3B-PPS BLACK
4A-LCP WHITE
4B-LCP BLACK

工程部
2017-07-16
ZW DANG

NO.	PART NAME	Q'TY	MATERIAL	PLATING & COLOR
3	TERMINAL(-)	1	PHOSPHOR BRONZE, T=0.25MM	Ni-Plating
2	TERMINAL(+)	1	PHOSPHOR BRONZE, T=0.25MM	Ni-Plating
1	HOUSING	1	PA66	BLACK

UNLESS OTHERWISE SPECIFIED TOLERANCES

DECIMALS: X :±0.30, X.X :±0.25, X.XX :±0.20, X.XXX :±0.10
ANGLES: X :±1°, X.X :±0.5°

WEIGHT: 1.7g

SHEET 1 OF 1

MYOUNG 美阳 www.meiyangdz.com

DSND	YangFeng	DATE	2017-07-16	TITLE: BS-2032-5-3 DIP
CHKD	ZhouRuicai	DATE	2017-07-16	
APVD	XueShunyong	DATE	2017-07-16	PART NO.: BS-05-A1BJ003
SCALE: 2:1	SIZE: A4	VIEW:		
UNIT: mm	REV.: A/0	OBJECT: MY		DRAW NO.:WD-CP-0024