ROHS Compliant

| MAPX | MODIFICATION | DATE | DRAW | APPROVE |
|---|---|---|---|---|
| | | | | |

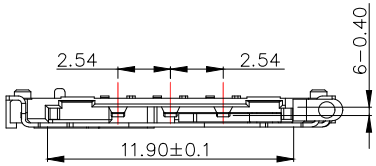


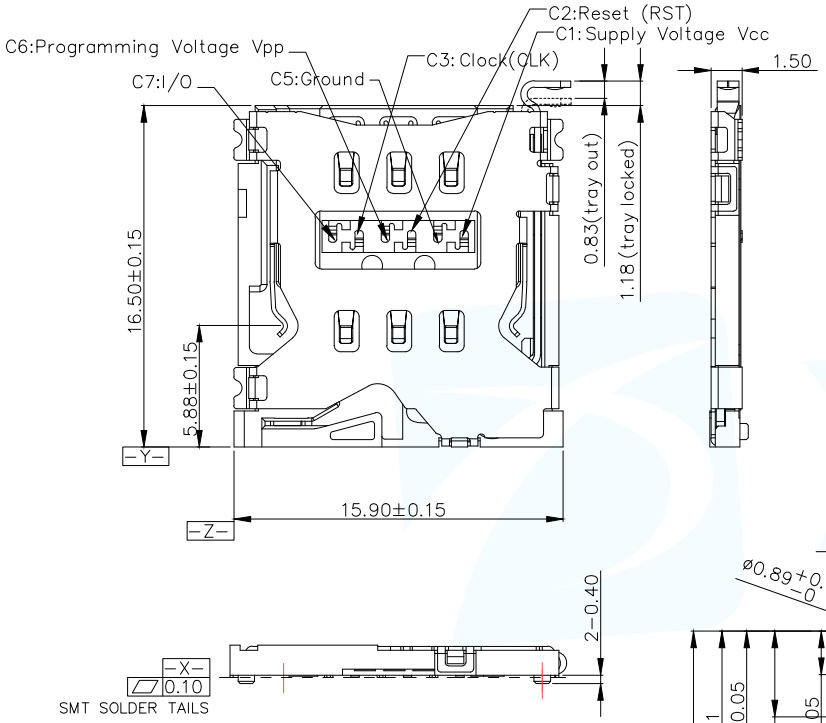


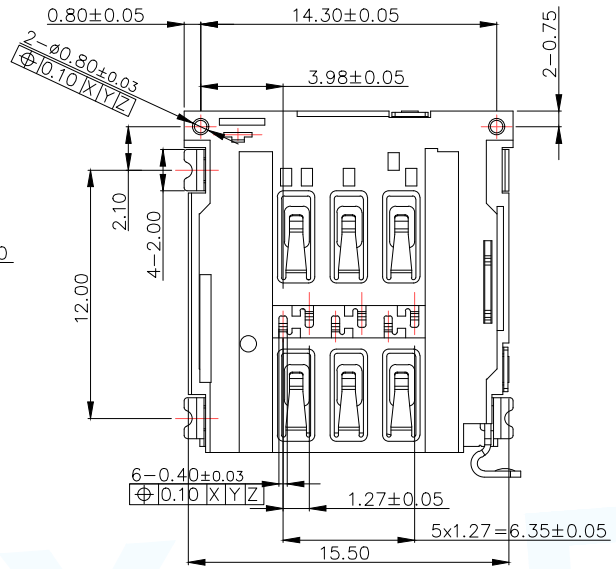


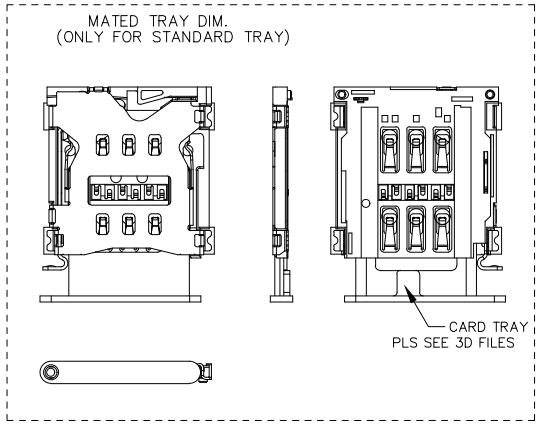


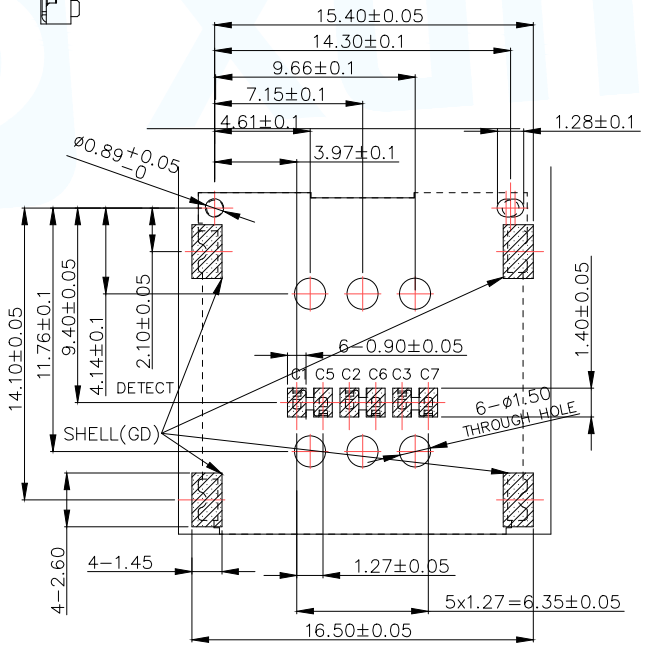


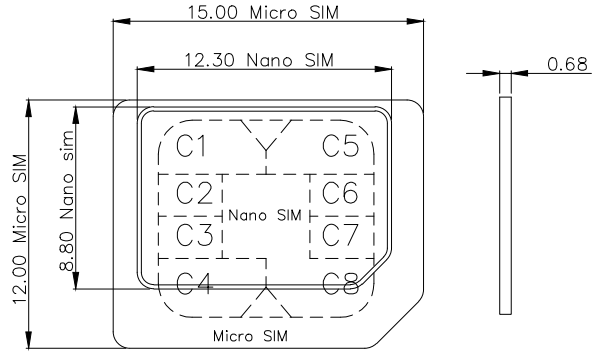


RECOMMENDED PCB LAYOUT

GENERAL TOLERANCE ±0.05

NOTES:

1. ELECTRICAL CHARACTERISTICS:
   1-1. CURRENT RATING: 1 Amp/PIN. MAX.
   1-2. VOLTAGE: 30V DC. MAX.
   1-3. LOW LEVEL CONTACT RESISTANCE: 30 mOhms MAX. INITIALLY.
   1-4. DIELECTRIC WITHSTANDING VOLTAGE: 500V AC MIN. FOR 1 MINUTE.
   1-5. INSULATION RESISTANCE: 100MOhms MIN.. (DC 500V FOR 1 MINUTE)
2. MECHANICAL CHARACTERISTICS:
   2-1. DURABILITY: 1500 CYCLES.
   2-2. OPERATING FORCE (INSERTING & WITHDRAWAL): 1N-10N.
3. ENVIRONMENTAL CHARACTERISTICS:
   3-1. OPERATING TEMP. RANGE: -25°C TO 85°C. [INCLUDING TERMINAL TEMP. RISE]
   3-2. STORAGE TEMP.: -40°C TO 85°C.
4. QUANTITY OF PRODUCTS: 1000PCS/REEL MIN.
5. PLEASE CONTACT SALES REPRESENTATIVE TO VERIFY PRODUCT DETAILS.

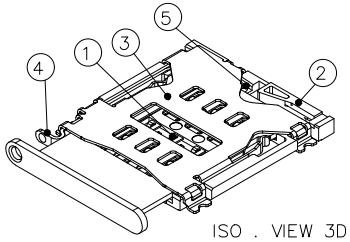


ISO . VIEW 3D

| ITEM | PART NAME | Q'TY | DESCRIPTION |
|---|---|---|---|
| 5 | HINGE | 1 | SUS, NO PLATING |
| 4 | LEVER | 1 | SUS, NO PLATING |
| 3 | SHELL | 1 | SUS, GOLD PLATING |
| 2 | HOUSING | 1 | LCP,BLACK |
| 1 | CONTACT | 1 | BRONZE ALLOY, GOLD PLATING |

MANUFACTURE DWG

东莞市讯普电子科技有限公司
DongGuan XunPu Electronics Co,Ltd

UNLESS OTHERWISE SPECIFED TOLERANCES

| DECIMALS: | ANGLES: |
|---|---|
| X.: ±0.50 | X.°: ±2° |
| X.X: ±0.20 | X.X: ±1° |
| X.XX: ±0.10 | |

TITLE: NANO SIM CARD 6PIN 1.5H CONN. WITH LEVER (NO DITECT)

| | | |
|---|---|---|
| PAR | SMN-327 | |
| DWN | YAO | |
| CHKD | | |
| APVD | | |
| SCALE1:1 | UNIT: MM | |
| SIZE: A4 | SHEET: 1F1 | REV: A |

CUSTOMER COPY