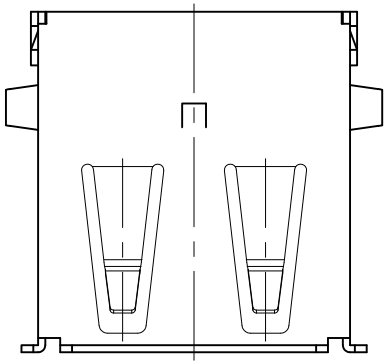

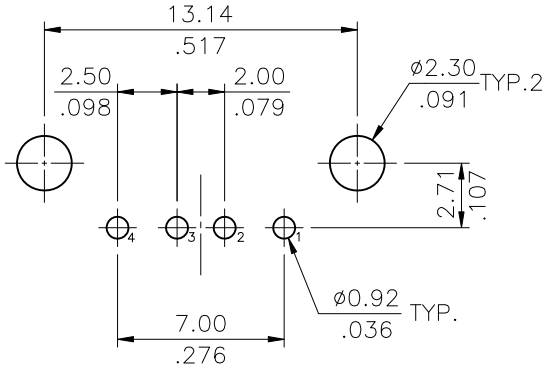

Recommmended P.C. Board Layout
TOP VIEW(TOLERANCE:±0.10)

Materials :

Insulator: Glass filled polyester UL 94V-0
Contacts: Phosphor Bronze
Shell: Brass
Shell Plating: 80μ" Nickel over 50μ" Cu

Ordering Code:

CU01	S	A	H	1	S	00
①	②	③	④	⑤	⑥	⑦

① Series No.
② S= Socket
③ Plating option:
A= Selective Gold flash plated over 1.27μm(50μ") Nickel
C= Selective 0.76μm(30μ") Gold plated over 1.27μm(50μ") Nickel
④ H= Right angle
⑤ Insulator Color: 1= Black, 0= White
⑥ S= Single port
⑦ Option: 00= Standard

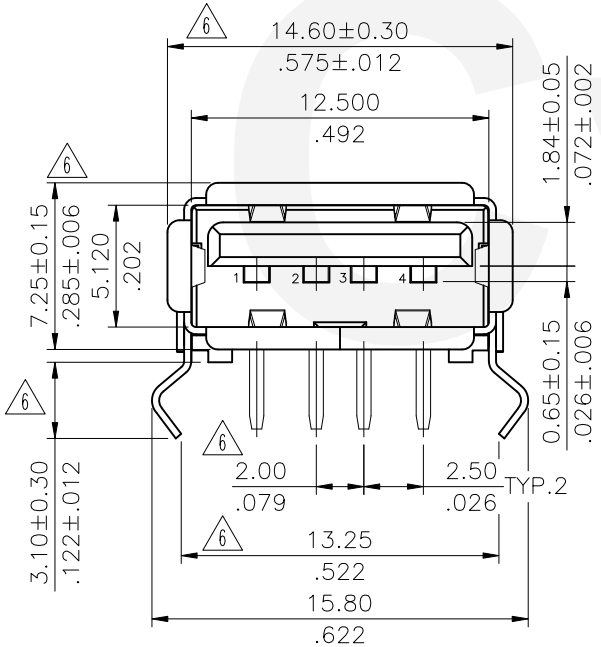

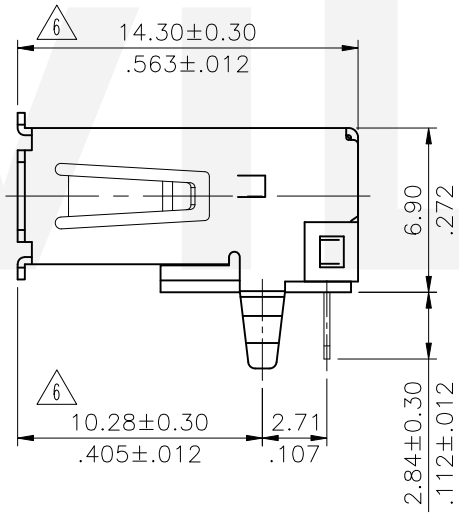

Lead Free Process

RoHS Compliant

SYM	NAME	DATE	REVISIONS
6	Kenny	9/08-20'	ECRT120054/ECNT120247
5	Sandy	6/28-16'	ECRB116040/ECNT116138
4	Hank	11/8/06'	ECN06412
3	Jim	8/22/06'	ECR06070-0/ECN06293

CVILUX CORP 2020.10.16 ISSUED

		DATE
DRAWN BY:	Kenny	10/12-20'
ENGINEER:	Sun	10/12-20'
CHECKED BY:	Eisley	10/15-20'
APPROVED BY:	Eisley	10/15-20'

UNIT: mm / inch

TOLERANCE UNLESS OTHERWISE SPECIFIED

.X	± 0.25/.010	X.°	± 1°
.XX	± 0.20/.008	.X°	±
.XXX	± 0.10/.004	.XX°	±

TITLE: U.S.B TYPE A RIGHT ANGLE BOARD MOUNT SOCKET

MATERIAL:

FINISH:

瀚荃股份有限公司
CviLux Corporation

DRAWING NO.	CU0101SP	PART NO.	CU01S*H*S00
SCALE	3 / 1	SHEET	1 OF 1