HSF

NOTES:
1.Electrical Performance:
1-1.Current Rating:0.5 A at AC 100V.
1-2.Withstand Voltage:250V AC.
1-3.Contact Resistance:See Table.
1-4.Insulation Resistance:1000MΩ Min.
1-5.Operation Temperature:-55℃to+85℃
2.Material:
1.Housing:LCP;Black/Natural;UL94V-0.
2-2.Contact:Phosphor Bronze,T=0.20mm.
2-3.Fitting Nail:Brass,T=0.25mm.
2-4.Metal Cap :Stainless Steel,T=0.20mm.
3.Finish:
3-1.Contact:Gold Plating On Contact Area;
Matte Tin Plating On Solder Tails Over Ni.
3-2.Fitting Nail:Sn Plating Over, Ni Under Plating

Flatness: <80Pins The "M" Is 0.12mm MAX
≥80Pins The "M" Is 0.15mm MAX

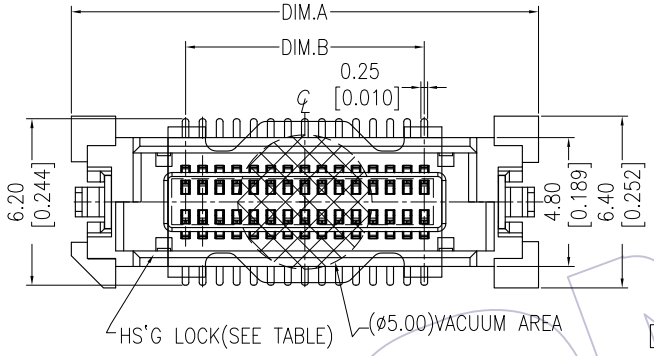

Recommended P.C.B Layout(Top Side)
(PCB BOARD TOLERANCE±0.05)

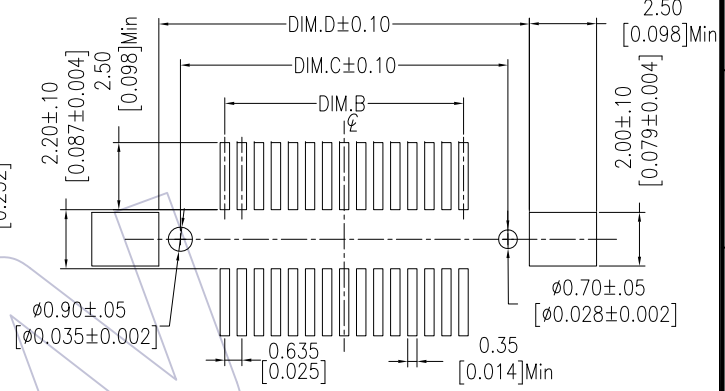

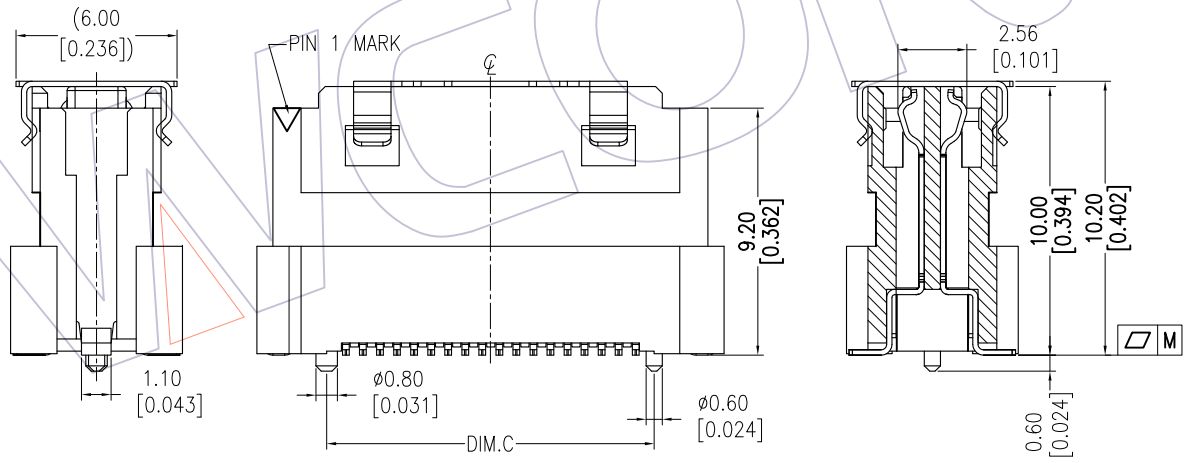

Ordering Information

3660-S XXX - 100 XX R 01

No.of Pins | Housing High | Contact Plating | R=Tape&Reel+CAP

G1=3u"Gold
G2=5u"Gold
G3=10u"Gold/Tin
S1=3u"Gold/Tin
S2=5u"Gold/Tin
S3=10u"Gold/Tin

NO	55.07	53.47	50.165	58.67	160
	48.72	47.12	43.815	52.32	140
	42.30	40.77	37.465	45.97	120
	36.02	34.42	31.115	39.62	100
	32.85	31.25	27.940	36.45	90
	29.67	28.07	24.765	33.27	80
YES	26.50	24.90	21.590	30.10	70
	23.32	21.72	18.415	26.92	60
	20.15	18.55	15.240	23.75	50
	16.97	15.37	12.065	20.57	40
	13.80	12.20	8.890	17.40	30
	10.62	9.02	5.715	14.22	20
HS'G LOCK	DIM.D	DIM.C	DIM.B	DIM.A	PIN NO.

ASS'Y HIGH(H)	PLUG(H1)	SOCKET(H2)
12.00	5.00	10.00
13.00	6.00	
14.00	7.00	
15.00	8.00	
16.00	9.00	

ASS'Y HIGH(H)	Before Test	After Test
12.0～13.0	≤60mΩ	≤80mΩ
14.0～16.0	≤70mΩ	≤90mΩ

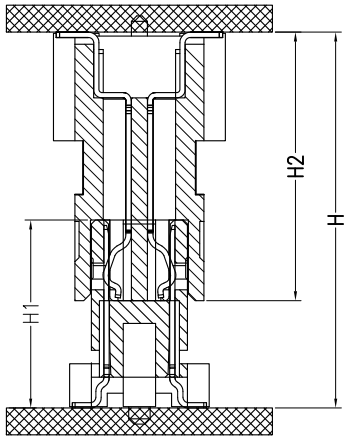

Assembly

REV	DATE	MODIFICATION DESCRIPTION	CHANGE
A0	2017/07/19	NEW	——

OPERATION	
X.X	±0.40
X.XX	±0.25
X.XXX	±0.15
Angle	± 3°
DIM	TOL

DRAW	Ding	DATE	2017/07/19
CHECK		DATE	
APPROVE		DATE	

SCALE	FIT
UNIT	mm / inch
SIZE	A4
SHEET	1/1
PROJ.	

PART NO. 3660-SXXX-100XXR01

TITLE: 0.635mm BTB "M" FEMALE SMT TYPE

Customer NO.

WCON
Http: www.wcon.com
WCON-Dongguan
Tel: +86 769 85358920
Fax: +86 769 85358915
E-mail: sales@wcon.com
WCON-Kunshan
Tel: +86 512 57468408
Fax: +86 512 57468468
E-mail: salesks@wcon.com