HSF

NOTES:
Current Rating: 1.0AMP
Contact Resistance: 20mΩ Max
Withstand Voltage: 500V AC/DC
Insulation Resistance: 1000MΩ Min
Operation Temperature: −40℃ to +105℃

Contact Material: Brass
Contact plating: Au Or Sn over Ni
Insulator Material: PA9T+30%G.F UL94V−0

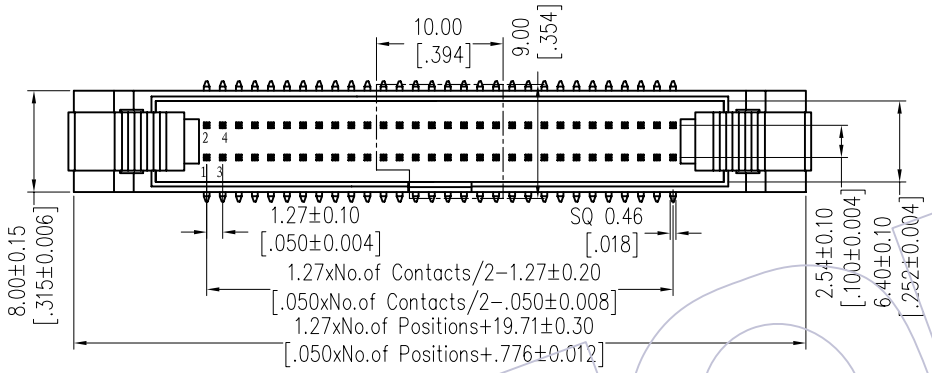

Recommended P.C.B Layout(Top Side)
(PCB BOARD TOLERANCE±0.05)

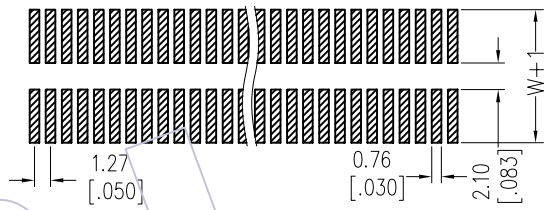

Ordering Information

3240- XX M XX B S X 1

No.of Pins	Contact Plating	Color Insulator	Packing
10 34	G0=Gold Flash	B=Black	T=Tube
12 40	G3=10u"Gold	U=Blue	
14 44	G4=15u"Gold	W=White	
16 50	G5=30u"Gold		
20 60	S0=Gold Flash/Tin		
24 64	S3=10u"Gold/Tin		
26 80	S4=15u"Gold/Tin		
30 100	S5=30u"Gold/Tin		
32	SN=Tin		

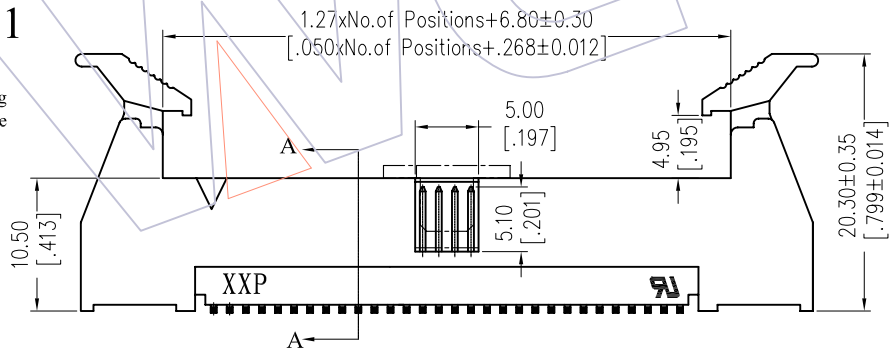

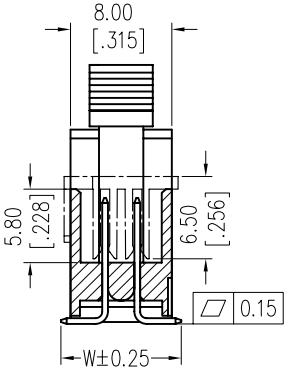

Section "A-A"

Item	Pitch	Mating
Standard	1.27X2.54	5242
Alternate		

Dimension antitheses list	
ITEM	W
Standard	9.50
Alternate	

REV	DATE	MODIFICATION DESCRIPTION	CHANGE
A0	2012/09/29	NEW	------

OPERATION	
X.X	±0.40
X.XX	±0.25
X.XXX	±0.15
Angle	± 3°
DIM	TOL

DRAW	JYHuang	DATE	2012/09/28
CHECK		DATE	
APPROVE		DATE	

SCALE	FIT
UNIT	mm
SIZE	A4
SHEET	1/1
PROJ.	

PART NO. 3240-XXMXXBSX1

TITLE: 1.27*2.54 EJECTOR HEADER SMT

Customer NO.

WCON
Http: www.wcon.com

WCON-Dongguan
Tel: +86 769 85358920
Fax: +86 769 85358915
E-mail: sales@wcon.com

WCON-Kunshan
Tel: +86 512 57468408
Fax: +86 512 57468468
E-mail: salesks@wcon.com