ROHS

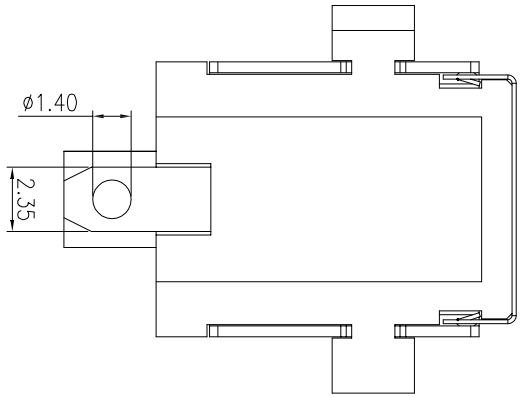

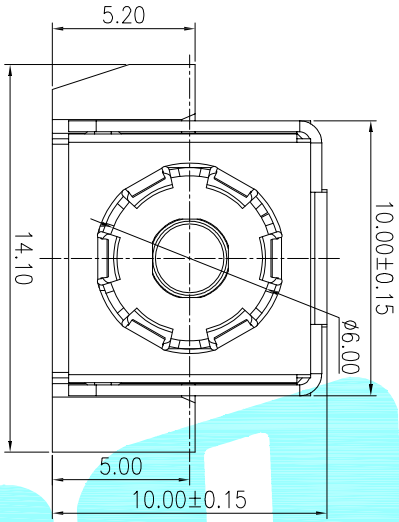

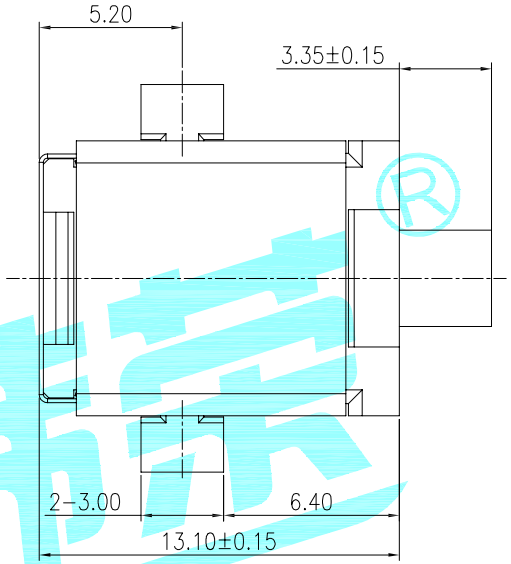

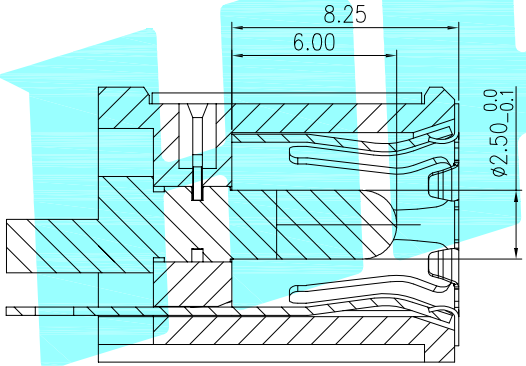

SECTION A–A

SPECIFICATIONS:

1. ELECTRICAL CHARACTERISTICS:
   - 1–1. RATING: 20V 10A
   - 1–2. CONTACT RESISTANCE: 30mΩ MAX.(INITIAL)
   - 1–3. DIELECTRIC WITHSTANDING VOLTAGE: 500V AC FOR ONE MINUTE
   - 1–4. INSULATION RESISTANCE: 100MΩ MIN. MEASURED BY 500V DC
2. MECHANICAL CHARACTERISTICS:
   - 2–1. INSERTION FORCE : 3.0 Kgf MAX.
   - 2–2. WITHDRAWAL FORCE : 0.3Kgf MIN.
3. LIFE TEST: 5,000 CYCLES MIN.

接点示意图

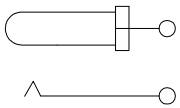

ITEM	PART NAME	TER'NO.	QTY.	MATERIAL	FINISHING	REMARK
③	Housing	——	1	THERMOPLASTIC	Black	——
②	Shell	——	1	SUS	Plating Nickel	——
①	Terminal	——	2	Phosphor bronze	Plating silver	——

APPROVALS		DATE
DRAWN	J.X.Zhang	2013/11/11
CHECKED		
APPROVALS		

HRO韩荣® ELECTRONICS CO.,LTD

TITLE: PHONE JACKES

PART NO. DC–054A

TOLERANCES ARE			ANGLE
	30~以上	±0.30	±2°
	10~30	±0.20	
	5~10	±0.15	
	~ 5	±0.10	

UNIT: mm | SCALE: 1:1 | PROJ:

DRAWING NO. —— | SHEET 1 OF 1

ECN NO.	REV.	DATE.	DESCRIPTION.	CHANGE.	CHECK.	APPRO.
——	A	——	NEW	——	——	——