MARK	DATE	REMARKS

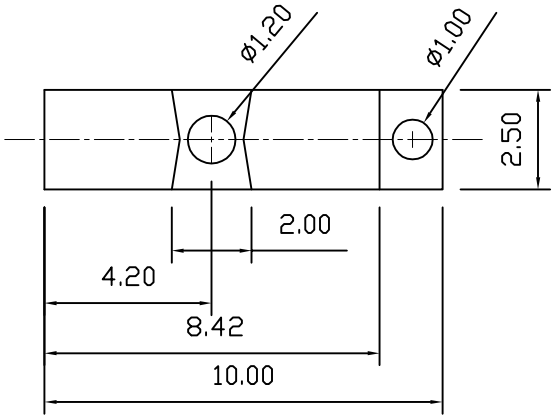

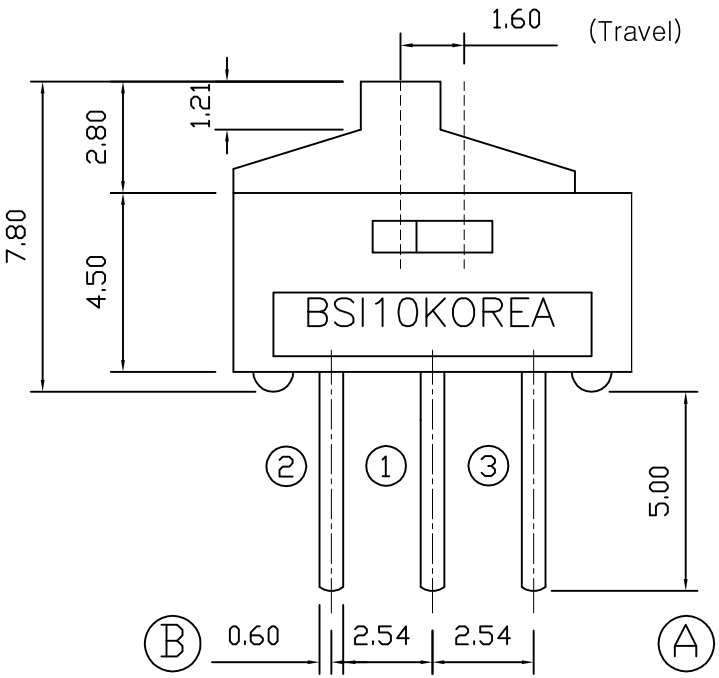

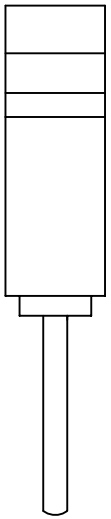

SPECIFICATION

1. Rating : AC, DC 12V(0.5A)~24V(0.3A)
   (Minimum Current: 1mA)
2. Contact Resistance : 30mΩ Max
3. Travel : 1.6mm
4. Operating Force : 250gf ±150gf
5. Life cycle : 2,000 Cycle(with load)

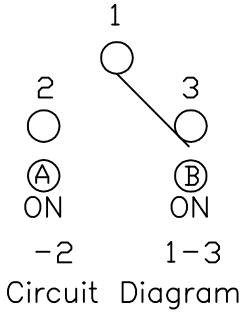

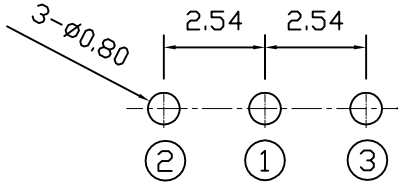

P.C.B DIMENSION

	SM-MSSBSIL10					
NO.	DWG No.	Q'TY	MAT'L	SPEC'	FINISH	REMARKS
	UNIT M/M	SCL.	MODEL NAME.	MINI SLIDE SWITCH		
			TITLE	BSIL-10		
APPD. K.I LEE	CHKD. J.P ROH	D'SGD W.J LEE	DRAWG. NO.	Sheet No. 1/1	REV	A
			SUNGMUN ELECTRONICS CO.,LTD			