环保物料

TEL:0769-82001899

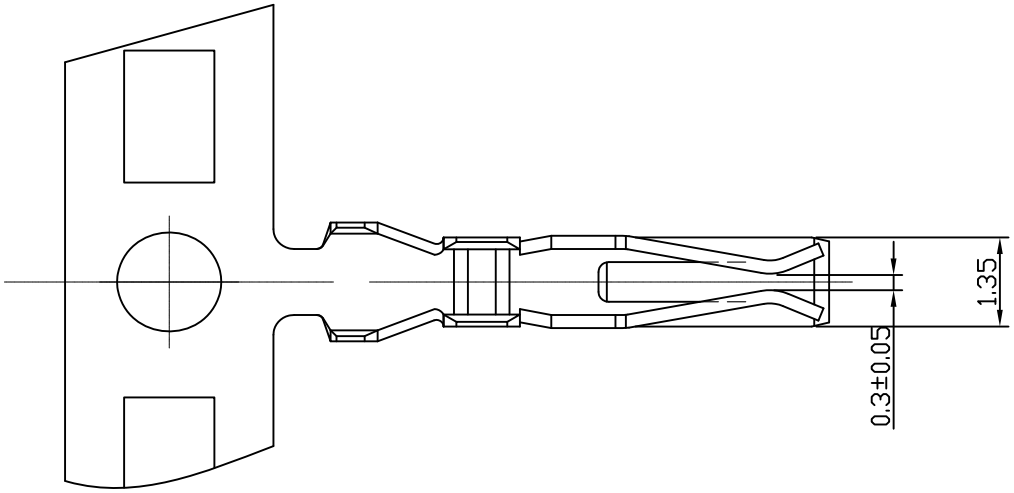

技术参数：
额定电流(Current rating)：3.0A AC/DC
额定电压(Voltage rating)：250V AC/DC
工作温度(Working temperature)：-25 ° C to +85 ° C
接触电阻(Contact resistance)：20MΩ Max.
绝缘电阻(Insulation resistance)：1000MΩ Min
耐压值(Withstand voltage)：1000V AC/minute
适用线规(Applicable wire)：AWG#22-28

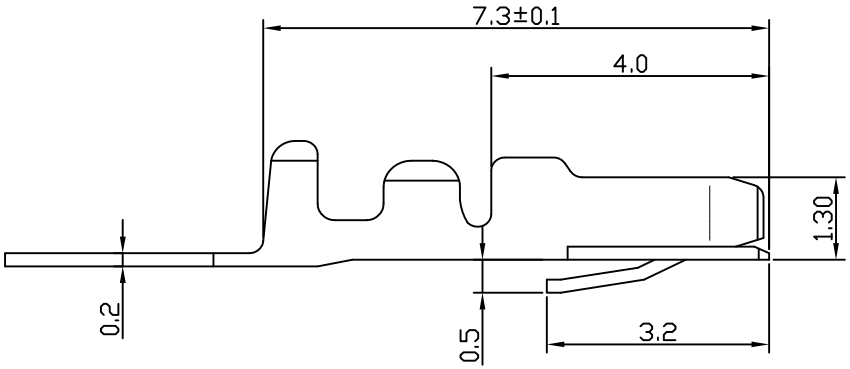

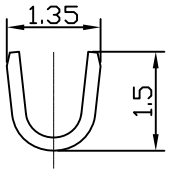

SEC:B-B

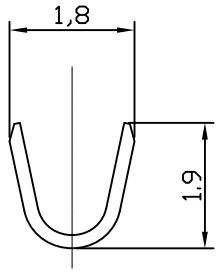

SEC:A-A

Material	Finish	Wire Range	InsulationO.D	Qty/reel
Phosphor bronze	Tin-plated	AWG#22-#28	1.60mm	12,000pcs

VER	MODIFICATION	DRAW	DATE
A0			

TOLERANCE UNLESS OTHERWISE

X.	±0.30	X°	±5°
.X	±0.20	.X°	±2°
.XX	±0.08	.XX°	±1°
.XXX	±0.03	.XXX°	±0.5°

DRAWN	CK tan
CHKD	
APPD	
VIEW	

XFCN兴飞连接器有限公司
CONNECTORS XFCN CONNECTORS CO., LTD.

PRODUCT NAME	2.00mm Crimp Style Connectors
PART. NO.	T2026PS-2

SHEET	1/1
DATE	2010. 4. 12
UNITS	mm
SCALE	1:1
DWG NO.	009