© 2020 TE Connectivity. All Rights Reserved.

STRIP FORM - UNSEALED
Bandware - ungedichtet

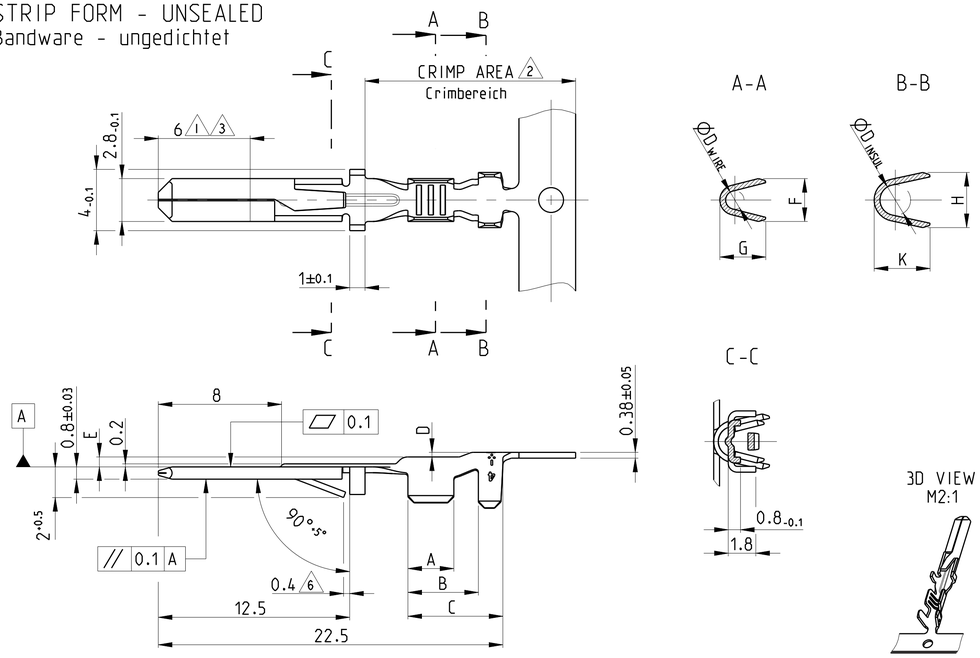

STRIP FORM - SINGLE WIRE SEAL
Bandware - Einzel-Dichtung System

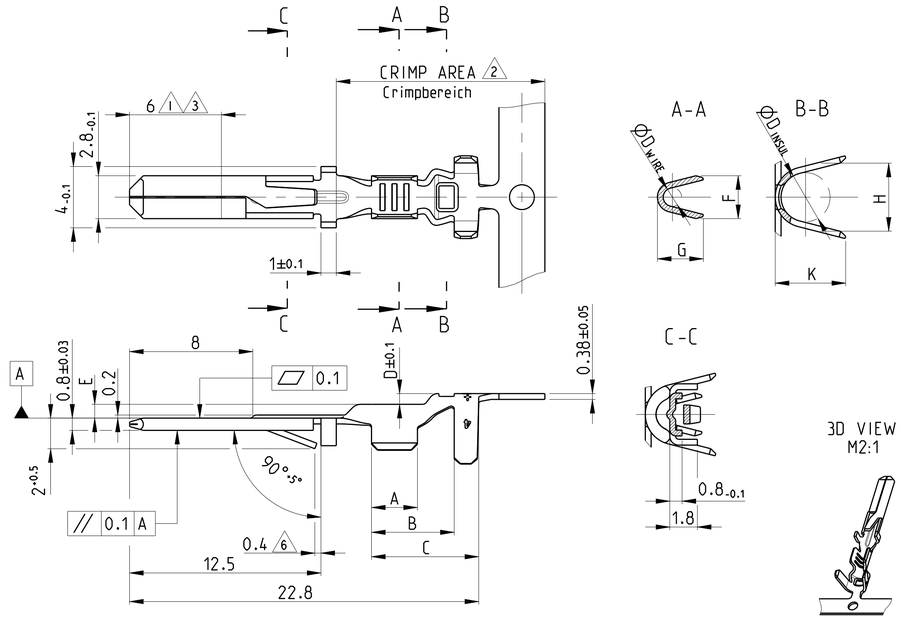

REVISIONS

P	LTR	DESCRIPTION	DATE	DWN	APVD
	A2	REVISED PER ECR-19-019293	07FEB2020	BH	E.W

LOOSE PIECE
Einzelausführung

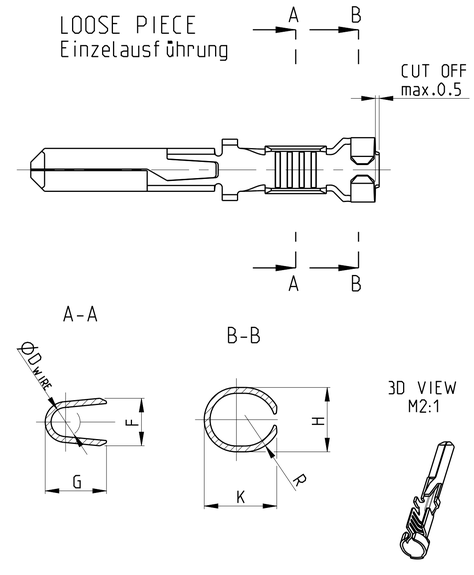

SINGLE WIRE SEAL/Einzel-Dichtung	N/A	N/A	4.3	4.8	2.8	4.0	3.1	1.7	4.6	5.6	3.6	4.0	3.8	1.7	0.85	0.95	7.5	5.9	3.5	B	Ø3.4	1.0 - 2.5 FLR	PRETINNED min.1µm	CuSn4	0-965975-5	J	0-929949-5
																				B			SEL. GOLD PLATED 1 2	CuZn30	0-965975-4	J	0-929949-4
																				A			PLAIN	CuZn30	0-965975-3	J	0-929949-3
																				B			PRETINNED min.1µm	CuZn30	0-965975-2	J	0-929949-2
																				B			SEL. SILVER PLATED 3	CuZn30	0-965975-1	J	0-929949-1
	N/A	N/A	4.3	4.8	2.8	3.0	2.2	1.2	4.6	5.4	3.2	3.0	2.8	1.2	0.9	0.7	7.0	5.4	3.0	B	Ø3.4	0.5 - 1.0 FLR	SEL. GOLD PLATED 1 2	CuSn4	0-965974-7	A	5 0-929948-7
																				A			PLAIN	CuSn4	0-965974-6	A	0-929948-6
																				B			PRETINNED min.1µm	CuSn4	0-965974-5	J	0-929948-5
																				B			SEL. GOLD PLATED 1 2	CuZn30	0-965974-4	J	5 0-929948-4
																				A			PLAIN	CuZn30	0-965974-3	J	0-929948-3
																				B			PRETINNED min.1µm	CuZn30	0-965974-2	J	8 ~~0-929948-2~~
																				B			SEL. SILVER PLATED 3	CuZn30	0-965974-1	J	0-929948-1
UNSEALED / ungedichtet	2-1579001-1 WITH DIE SET: mit Matrize: 1579001-2	N/A	2.5	2.5	1.4	2.2	2.0	0.8	2.8	2.8	1.4	2.2	2.2	0.8	0.65	0.2	5.7	4.1	2.5	B	Ø1.15 - 1.6	0.2 - 0.5 FLR	PRETINNED min.1µm	CuSn4	0-963962-5	D	8 ~~0-963961-5~~
																				B			SEL. GOLD PLATED 1 2	CuZn30	0-963962-4	D	0-963961-4
																				A			PLAIN	CuZn30	0-963962-3	D	0-963961-3
																				B			PRETINNED min.1µm	CuZn30	0-963962-2	D	0-963961-2
																				B			SEL. SILVER PLATED 3	CuZn30	0-963962-1	D	0-963961-1
	539635-1 WITH DIE SET: mit Matrize: 539743-2	878416-0	3.7	3.1	1.8	3.0	2.2	1.2	4.1	3.9	1.8	3.0	2.8	1.2	0.65	0.2	6.2	4.6	3.0	B	Ø1.4 - 2.3	0.5 - 1.0 FLR	PRETINNED min.1µm	CuSn4	0-928931-5	P	0-928930-5
																				B			SEL. GOLD PLATED 1 2	CuZn30	0-928931-4	P	0-928930-4
																				A			PLAIN	CuZn30	0-928931-3	P	0-928930-3
																				B			PRETINNED min.1µm	CuZn30	0-928931-2	P	0-928930-2
																				B			SEL. SILVER PLATED 3	CuZn30	0-928931-1	P	0-928930-1
	169400 WITH DIE SET: mit Matrize: 734262 - 0	878402-0	4.4	3.8	2.3	4.0	3.1	1.8	4.9	4.7	2.6	4.0	3.8	1.8	1.15	0.3	7.2	5.6	4.0	B	Ø1.8 - 2.9	1.0 - 2.5 FLR	PRETINNED min.1µm	CuSn4	0-928794-5	R	0-928781-5
																				B			SEL. GOLD PLATED 1 2	CuZn30	0-928794-4	R	0-928781-4
																				A			PLAIN	CuZn30	0-928794-3	R	8 ~~0-928781-3~~
																				B			PRETINNED min.1µm	CuZn30	0-928794-2	R	0-928781-2
																				B			SEL. SILVER PLATED 3	CuZn30	0-928794-1	R	0-928781-1
	N/A	878227-0	4.8	4.2	2.4	4.0	3.1	1.9	5.3	4.8	3.1	4.0	3.8	1.9	1.15	0.4	7.2	5.6	4.0	B	Ø2.3 - 3.5 RB-Leitung	1.5 - 3 FLR	PRETINNED min.1µm	CuSn4	0-928924-5	R	0-927893-5
																				B			SEL. SILVER PLATED 3	CuSn4	0-928924-4	R	0-927893-4
																				A			PLAIN	CuSn4	0-928924-3	R	0-927893-3
																				B			SEL. GOLD PLATED 1 2	CuSn4	0-928924-2	R	0-927893-2
																				B			PRETINNED min.1µm	CuZn30	0-928924-1	R	8 ~~0-927893-1~~
	N/A	N/A	3.3	3.1	1.8	3.0	2.2	1.2	3.65	3.6	2.0	3.0	2.8	1.2	0.65	0.3	6.2	4.6	3.0	B	Ø1.6 - 2.2 RB-Leitung	0.5 - 1.0 FLR	PRETINNED min.1µm	CuSn4	0-928923-5	S	0-927892-5
																				B			SEL. SILVER PLATED 3	CuSn4	0-928923-4	S	0-927892-4
																				A			PLAIN	CuSn4	0-928923-3	S	0-927892-3
																				B			SEL. GOLD PLATED 1 2	CuSn4	0-928923-2	S	0-927892-2
																				B			PRETINNED min.1µm	CuZn30	0-928923-1	S	0-927892-1
	HAND TOOL Handzage	APPLICATOR Anschlag-WKZ	K	H	R	G	F	D_{WIRE}	K	H	D_{INSUL}	G	F	D_{WIRE}	E	D	C	B	A	7 REELING	INSULATION RANGE Isolations-durchmesser	WIRE RANGE DGB [mm²]	FINISH Oberfläche	MATERIAL	TYCO ORDER No. LOOSE PIECE Einzelausführung	REV	TYCO ORDER No. STRIP FORM Bandware
			INSULATION BARREL Isolationsbereich			WIRE BARREL Drahtbereich			INSULATION BARREL Isolationsbereich			WIRE BARREL Drahtbereich														
			LOOSE PIECE Einzelausführung						STRIP FORM Bandware																		
			CRIMP DIMENSIONS Crimpmaßen																								

NOTES:
Bemerkungen

1. CONTACT AREA min.0.75 µm Au OVER min.1.25 µm Ni
   Kontaktbereich min.0.75 µm Au über min.1.25 µm Ni
2. CRIMP AREA 1-2 µm Sn OVER min.0.05 µm Ni
   Crimpbereich 1-2 µm Sn über min.0.05 µm Ni
3. Min.3 µm Ag IN LOCALIZED AREA. FLASH Ag ON REMAINDER. BOTH OVER min.1.25 µm Ni
   Min.3 µm Ag im lokalisierte Bereich. Rest flashversilbert. beide über min.1.25 µm Ni
4. ALL VERSIONS SPLICE FREE EXCEPT OF 5
   Alle Versionen Splice-free außer 5
5. SPLICE ACCORDING TO TYCO-SPEC. 118-10107 SPLICE ADDITIONAL MARK WITH RED SPLICE-STICKER ON THE INTERLEAVING PAPER AND ON THE REEL
   Splice nach Tyco-Spec. 118-10107 zusätzlich Splice mit rotem Splice-Aufkleber auf dem Zwischenlagenpapier und auf dem Reel kennzeichnen
6. TO BE MEASURED BY DIMENSION 2 mm
   Bei Ausstellung 2 mm
7. REELING TYPE

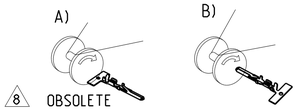

8. OBSOLETE

THIS DRAWING IS A CONTROLLED DOCUMENT.

DIMENSIONS: mm

TOLERANCES UNLESS OTHERWISE SPECIFIED: ISO 2768 -H E
0 PLC ± 0.2
1 PLC ± 0.2
2 PLC ± 0.2
3 PLC ± -
4 PLC ± -
ANGLES ± 1.5°

MATERIAL: see table / siehe Tabelle
FINISH: see table / siehe Tabelle

DRW: T. Konecny 21AUG2006
CHK: P.Hasek 6OCT2006
APVD: R.Vlcek 9OCT2006
PRODUCT SPEC: 108-18299
APPLICATION SPEC: 114-18014
WEIGHT: -

TE Connectivity

NAME: PRODUCT GROUP DRAWING FOR 2.8 mm FASTIN-FASTON TAB

SIZE: A1 | CAGE CODE: 00779 | DRAWING NO: C-1670467 | RESTRICTED TO

CUSTOMER DRAWING | SCALE 5:1 | SHEET 1 OF 1 | REV A2

4805 (3/13)