RoHS

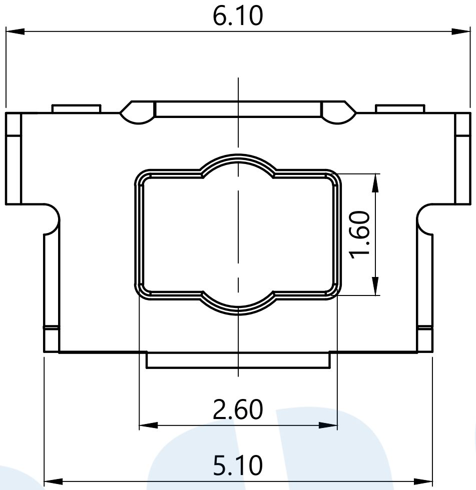

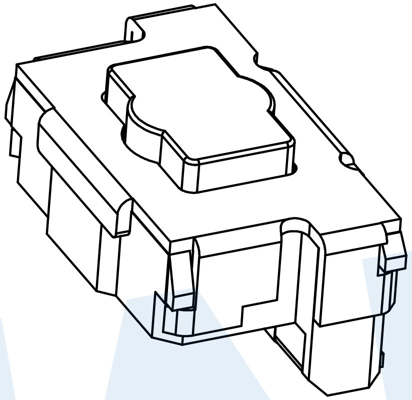

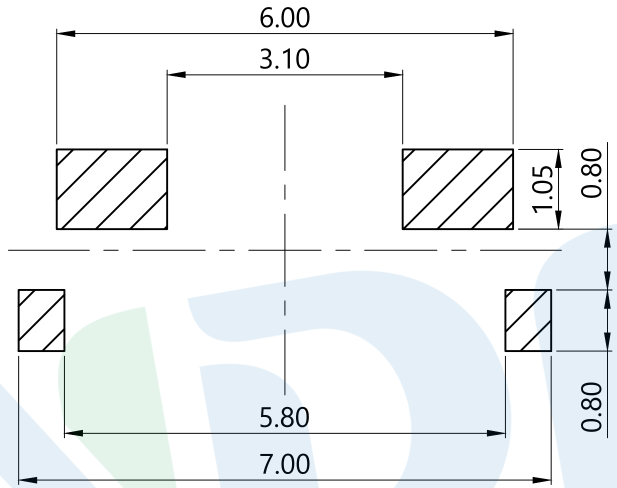

PCB Layout(Pattern side)

Circuit Diagram

OPERATING FORCE	
CODE	VIGOR
B2	180±30gf
B3	250±30gf

SHRAPNEL	
CODE	MATERIAL/QTY
D2	SUS/1PCS
D4	SUS/2PCS

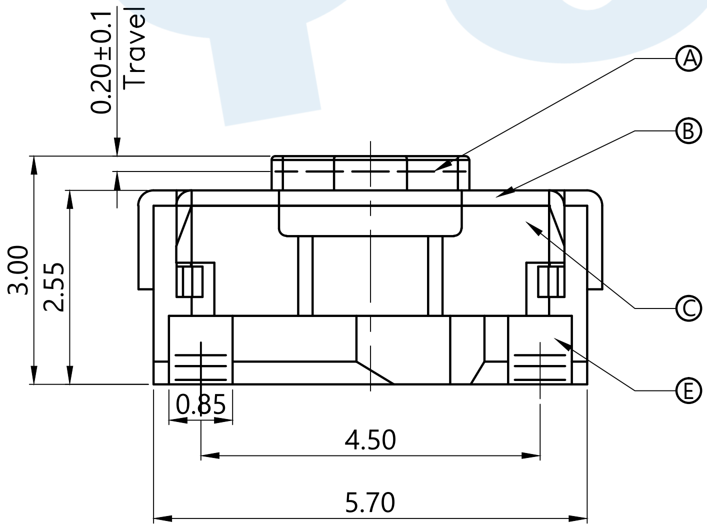

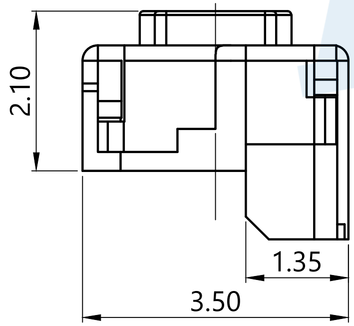

NO.	Name	Number	Qty	Materil	Remarks
Ⓕ	Dust film		1	Polyimide tape	
Ⓔ	Terminal		4	Phosphorus copper	Silvering
Ⓓ	Reed		1	SUS	Silver cowerncd
Ⓒ	Base		1	LCP	White
Ⓑ	Cover		1	Phosphorus copper	Silvering
Ⓐ	Button		1	LCP	Black

YUANDI® Yuandi Electronics Co,Ltd

angle	±2°	design		date		name	TACT SWITCHS
10~30	±0.30	Review		date			
5~10	±0.20	Approved		date		name	TS-1061B-B□D□
~ 5	±0.10	Drawing number:					
Tolerance not specified		Proportion	1:1	unit	mm	gape number	A4

modify | Review | Approved