本公司智慧財產，未經同意不得複製
DAILYWELL copyright, may not be used
without permission from DAILYWELL

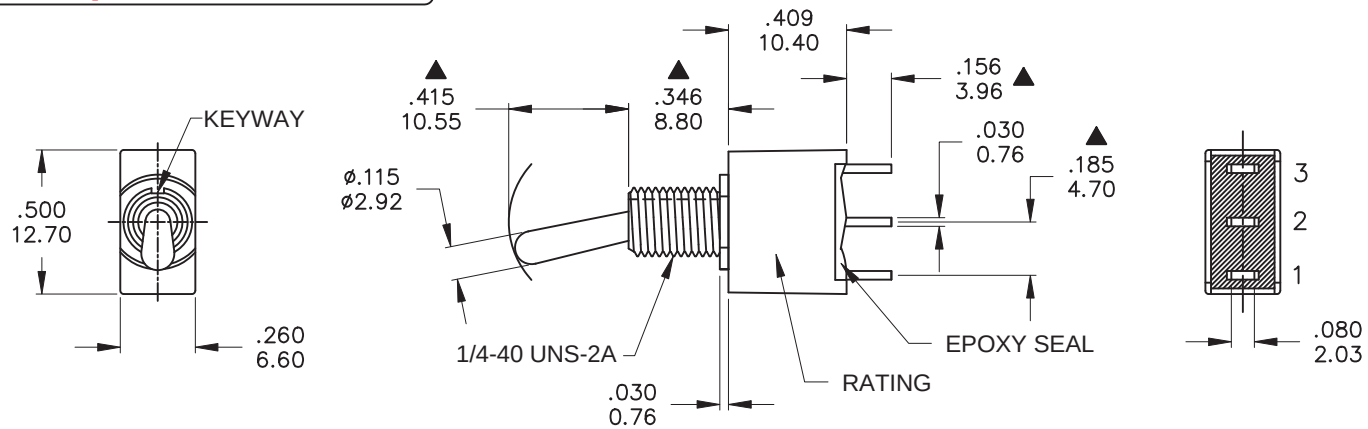

Model No.	POS.1	POS.2	POS.3
1AS1	ON	NONE	ON
Term. Comm.	2-3	N/A	2-1
SCHEMATIC			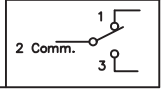

SWITCH FUNCTION

	PART NO.	PART NAME	Q'TY
1	MNU-1M01A	1/4 INCH NUTS	2
2	MNU-1M02	LOCKING RING	1
3	MNU-1M03	LOCK WASHER	1

FILE NAME:HARDWARE-0002

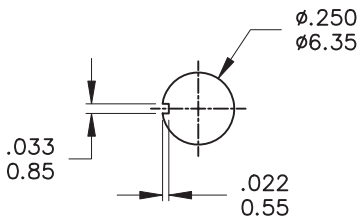

Without locking ring.

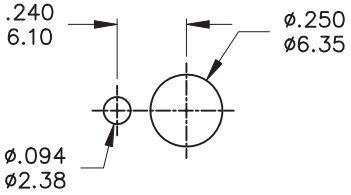

With standard locking ring.

PANEL MOUNTING

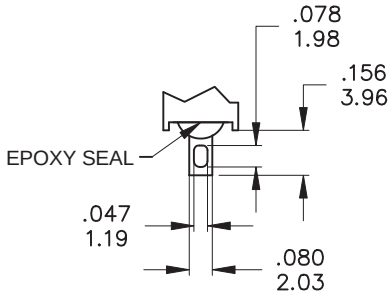

SOLDER LUG

SPECIFICATIONS
MECHANICAL LIFE: 30,000 make-and-break cycles.
CONTACT RESISTANCE: 10 mΩ max. initial @ 2-4VDC
100mA for both silver and gold plated contacts.
INSULATION RESISTANCE: 1,000 MΩ min.
DIELECTRIC STRENGTH: 1,000 Vrms min.@sea level.
OPERATING TEMPERATURE: -40°C to 85°C.

MATERIALS
CASE BUSHING: Glass filled nylon 6/6, flame retardant, heat stabilized(UL94v-0).
ACTUATOR: Brass,chrome plated with internal, O-ring seal standard.
CONTACT/TERMINAL: Copper alloy.
RoHS & Lead Free

	CONTACT PLATING	TERMINAL PLATING	RATINGS
Q	Silver	Gold flash over silver	5 Amps @120 VAC or 28VDC
C	Gold over Silver	Gold over silver	2 Amps @250 VAC
R	Gold	Gold	0.4 Volt-Amps(VA) max. @20V max. (AC or DC)

德利威電子股份有限公司
DAILYWELL ELECTRONICS CO.,LTD.

	符號	原尺寸	修改後尺寸	變更日期
1	Ⓐ		操作溫度-30修訂為-40	MAY-23-2018
2	Ⓑ			
3	Ⓒ			
4	Ⓓ			
5	Ⓔ			

Ⓐ

SCALE (比例) : 3 : 2

TOLERANCE (公差) :
0.00 mm ± 0.25mm
0.0 mm ± 0.40mm
ANGULAR : ± 5°
FILE NAME : 1ASP0433

TITLE 圖名	Sealed Miniature Toggle Switches			SIZE 圖紙	A4
DWG NO. 圖號	1AS1T1B1M1QES-5			UNIT 單位	inch mm
REV. 版本	B	DATE 日期	SEP - 03 - 2010	SHEET 張數	1 of 1
CHECKED BY 審核	陳燈財		DRAWN BY 製圖	IRENE	