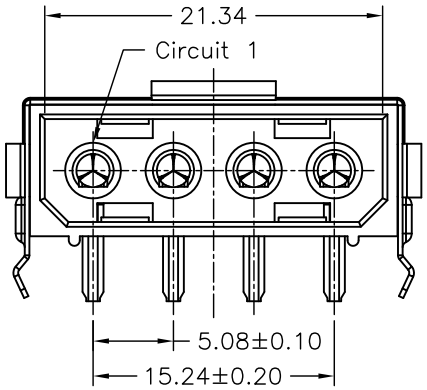

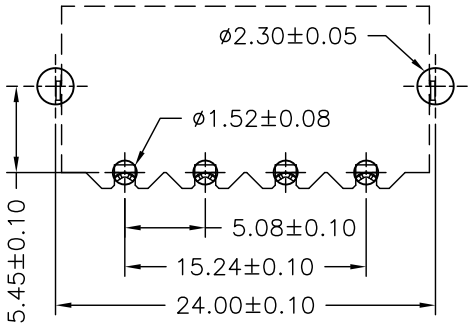

P.C.B. LAYOUT

Ordering code

C5080 WR-04P XXX
① ② ③ ④

① Series No.
② Connector type: WR=Right angle
③ No. of circuits
④ Option code:
Blank=Nylon6T,V-0; Color: Natural(Black)

SPECIFICATIONS
Current Rating: 10A AC,DC
Voltage Rating: 250V AC,DC
Temperature Range: -25°C ~ +85°C
Contact Resistance: 10mΩ Max
Insulation Resistance: 1000MΩ Min
Withstanding Voltage: 1500V AC/minute
Pin Material: Brass/Tin-plated
Metal Band: Brass/Tin-plated
Material: Nylon 6T,UL94V-0
Color: Natural(Black)

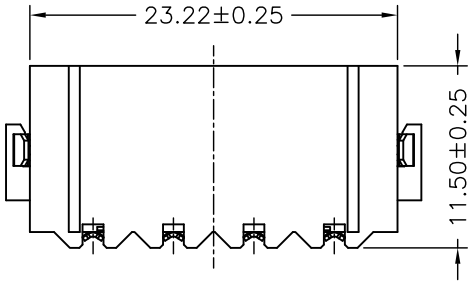

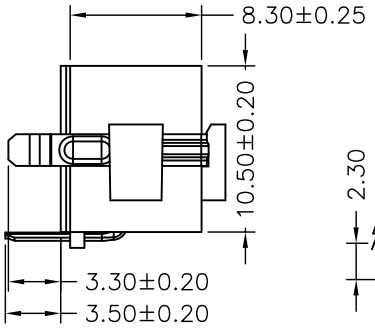

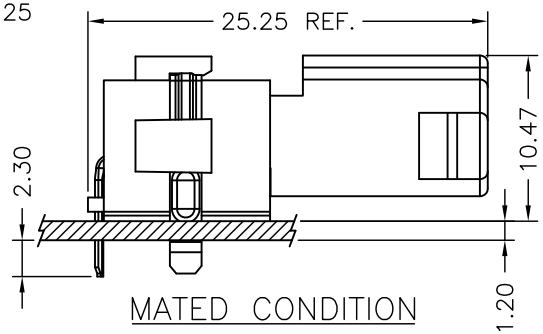

MATED CONDITION

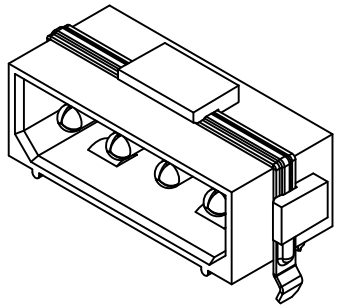

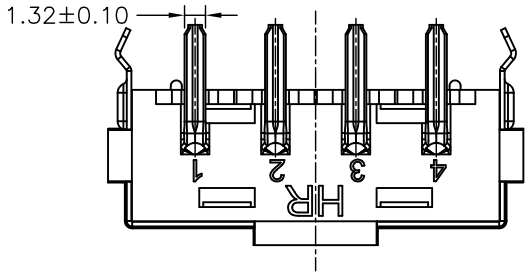

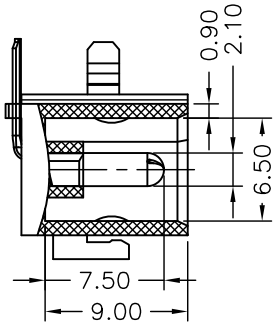

REV.	DESCRIPTION	DATE	NAME
A1	EN1107280313	2011.07.28	肖勇
A0	NEW RELEASE	2007.04.25	董正一

燦達電子工業股份有限公司
JOINT TECH ELECTRONIC IND. CO., LTD.

UNIT	SCALE	SHEET
mm		1 of 1

DRAWN BY	APPROVED BY
歐陽小強 2007.04.25	董正一 2007.04.25

GENERAL TOLERANCE
X.X±0.25
X.XX±0.15
X.XXX±0.05
ANGLE±

TITLE:
P/N:C5080WR-04P
5.08mm PITCH
90°WAFER

DRAW NO.: C5080WR-04P
REV. A1