RevNo	Revision note	Date	Signature
1	According To Customer Request ,Case Color Change	2010.06.01	H.Z.T
2	Switch Name And Mechanical Life change	2011.05.31	L.Y.D

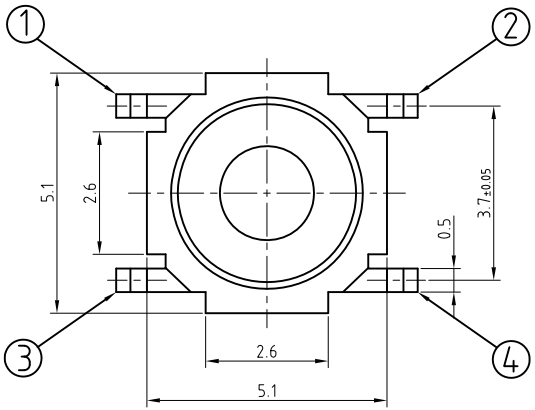

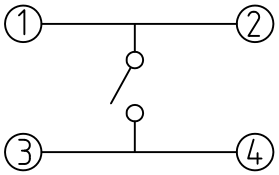

CIRCUIT DIAGRAM

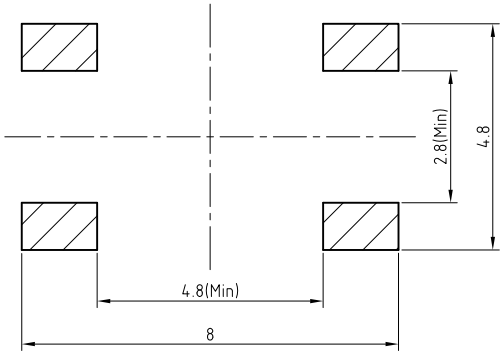

P.C.B LAND DIMENSION

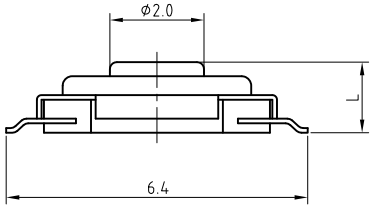

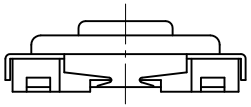

NOTE

1.TRAVEL : 0.25±0.1mm
2.CONTACT RESISTANCE : 100mΩ Max
3.GENERAL TOLERANCE : ±0.2
4.MANUFACTURING SPECIFICATION WOULD BE ACCORDANCE WITH JT0010-01

MODEL NAME	CODE NO.	L (mm)	STEM MATERIAL	LIFE CYCLE	CASE COLOR	O/FORCE
JT-1140WAL	130010000088	1.7 $^{+0.1}_{-0.05}$	LCP	100,000	NATURAL	260 ±50gf
JT-1140WA	130010000087	1.7 $^{+0.1}_{-0.05}$	BRASS		BLACK 1	
JT-1140WL	130010000086	1.5 $^{+0.1}_{-0}$	LCP		NATURAL	
JT-1140W	130010000085	1.5 $^{+0.1}_{-0}$	BRASS			
JT-1140L	130010000084	1.5 $^{+0.1}_{-0}$	LCP	1,000,000 2	BLACK	160 ±50gf
JT-1140CK 2	130010000083	1.5 $^{+0.1}_{-0}$	BRASS			

Designed by L.Y.D	NAMAE ELECTRONICS			
Checked by B.SAGONG				
Approved by J.Y.CHUNG	Unit mm	Scale N/S	Date 2011.06.01	
Item TACTILE SWITCH	Tool Au	Sheet 1/1	Rev. 1	
Model JT-1140 Series	Drawing name ASS'Y DIAGRAM			

1.Temperature range:

1.1 Storage Temperature range -30℃ to 80℃

1.2 OperatingTemperature range -20℃ to 70℃

1.3 Test Conditions

1.3.1Tests and measurements shall be made in the following standard clnditions unless otherwise specified:

Normal temperature (temperature 5 to 35℃)

Normal humidity (relative humidity 45 to 85%)

Normal pressure (pressure 860 to 1060 mbars)

1.3.2 In case any question arises from the judgement made, tests shall be conducted in the following conditions:

Temperature (20±2℃)

Relative humidity (65±5%)

Pressure (860 to 1060 mbars)

2. Appearance、 Structure and Dimension:

2.1 Appearance : There shall be no defects that affect the serviceability of the product.

2.2 Structure and Dimension : Shall conform to the assembly drawings.

3. Rating : DC 12V 50㎃ Max

4. Electrical Performance

	PROPERTY	TEST CONDITIONS	PERFORMANCE
4.1	Contact Resistance	Applying astatic load twice the actuating force to the center of the stem,measurements shall be made with a 1 kHz small-current contact resistance meter.	100 mΩ max
4.2	Insulation resistance	Measurements shall be made following application of DC100V potintial across terminals and across terminals and frame for one minute.	100 MΩ min
4.3	Dielectric witstanding voltage	AC250V(50Hz or60Hz) shall be applied across terminals and across terminals and frame for one minute.	There shall be no breakdown

	PROPERTY	TEST CONDITIONS	PERFORMANCE
4.4	Bounce	Lightly striking the center of the stem at a rate encountered in normal use (3 to 4 operations per sec.), Bounce shall be tested at “ON”and “OFF”. 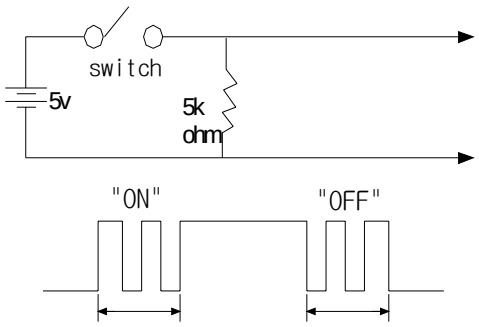 	5 m sec max.

5. Mechanical Performance

	PROPERTY	TEST CONDITIONS	PERFORMANCE
5.1	Actuating Force	Placing the switch such that the direction of switch operation is vertical and then gradually increasing the load applied to the center of the stem, the maximum load required for the stem to come to a stop shall be measured.	160 ± 50 gf 260 ± 50 gf
5.2	Travel	Placing the switch such that the direction of switch operation is vertical and then applying a static load twice the actuating force to the center of the stem,the travel distance for the stem to come to a stop shall be measured.	0.25±0.1mm
5.3	Return Force	The sample switch is installed such that the direction of switch operation is vertical and,upon depression of the stem in its center the whole travel distance ,the force of the stem to return to its free position shall be measured.	45 gf min
5.4	Stem Strength	Placing the switch such that the direction of switch operation is vertical, the maximum force to withstand a pull applied oppsite to the direction of stem operation shall be measured.	3 kgf

6. Environmental Performance

	PROPERTY	TEST CONDITIONS	PERFORMANCE
6.1	Resistance to Low Temperatures	Following the test set forth below the sample shall be left in normal temperature and humidity conditions for one hour before measurements are made: (1) Temperature: -30±2℃ (2) Time: 96 hours (3) Water drops shall be removed.	Item 4.1、4.2、4.3、4.4 Item 5.1 Item 5.2
6.2	Heat Resistance	Following the test set forth below the sample shall be left in normal temperature and humidity conditions for one hour before measurements are made: (1)Temperature: 80±2℃ (2) Time: 96 hours	Item 4.1、4.2、4.3、4.4 Item 5.1 Item 5.2
6.3	Moisture Resistance	Following the test set forth below the sample shall be left in normal temperature and humidity conditions for one hour before measurements are made: (1) Temperature: 60±2℃ (2) Relative humidity: 90 to 95% (3) Time: 96 hours (4) Water drops shall be removed.	Contact resistance:500mΩ max Insulation resistance: 100 MΩ min. Item 4.3 Item 5.1 Item 5.2

7. Endurance Performance

	PROPERTY	TEST CONDITIONS	PERFORMANCE
7.1	Operating Life	Measurements shall be made following the test set forth below: (1)DC 5V 5mA resistive load. DC 5V 5mA (2)Rate of operation:2 to 3 operations per second (3)Depression: 160 / 250 gf (4)Cycles of operation: As per individual manufactured drawing.	Contact resistance: 1Ω max. Insulation resistance : 100MΩ min. Actuating force: + 30 %or- 30%of initial force. Item 4.3 Item 5.2
7.2	Vibration Resistance	Measurements shall be made following the test set forth below: (1)Range of oscillation:10 to 55Hz (2)Amplitude,pk-to-pk:1.5 mm (3)Cycle of sweep: 10-55-10Hz in one minute,approx. (4)Mode of sweep :Logarithmically sweep or uniform sweep. (5) Direction of oscillation: Three mutually perpendicular directions,including the directionof stem travel. (6) Duration of testing: 2 hours each ,for a total of 6hours.	Item 4.1、4.2、4.3、4.4 Item 5.1 Item 5.2

	PROPERTY	TEST CONDITIONS	PERFORMANCE
7.3	Impact Shock Resistance	Measurements shall be made following the test set forth below: (1)Acceleration:80g (2)Cycles of test :3 cycles each in 6directions, for a total of 18cycles 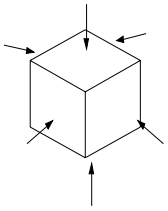	Item 4.1、4.2、4.3、4.4 Item 5.1 Item 5.2

8. Environmental Endurance

	PROPERTY	TEST CONDITIONS	PERFORMANCE
8.1	High Temperature Cycling	Foeeowing ten cycles of high temperature test .Saupee shall be Place in Normae temperature and humidity Conditious for one hour before measurements are made. During this test, water drops shall be removed. (1) Temperature : -30℃~80℃ (2) Cycling : 10 cycles 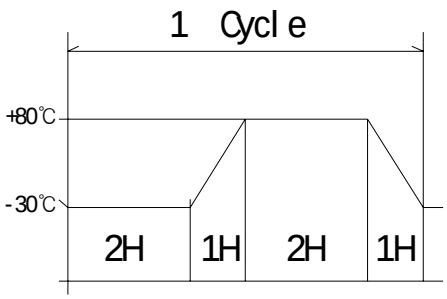	Item 4.1、4.2、4.3、4.4 Item 5.1 Item 5.2

9. Use Endurance

	PROPERTY	TEST CONDITIONS	PERFORMANCE
9.1	Solderability	Oven Temperature:260℃±5℃, Time: 5S±1S	Tin Area:90%
9.2	Patience high temperature	Preheat: Temperature on the copper foil surface should reach 180℃, 2±0.3 minutes after The P.W.B entered into the soldering equipment Soldering heat: Temperature on the copper foil surface should reach the peak temperature of 260℃ within 5 seconds after the P.B.W entered into soldering heat zone. 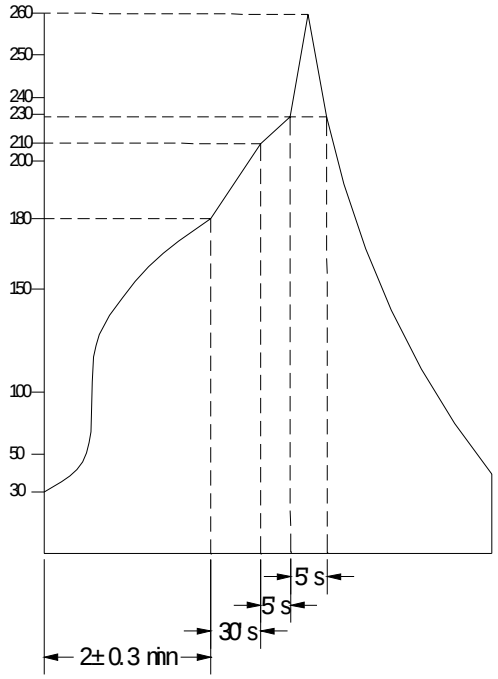	Surface of plastics don't frothed And formed

10. Other precautions

(1) Following the soldering process,do not try to clean the switch with a solvent or the like.

(2) Safeguard the switch assembly against flux penetration from its topside.

(3) Please have the products keep in close status and the storage time is 90 days guaranty after delivering the goods at most.

RevNo	Revision note	Date	Signature
2	Switch Name Change	2011.05.31	L.Y.D

THE DIMENSION OF CARRIER TAPE, COVER TAPE AND REEL

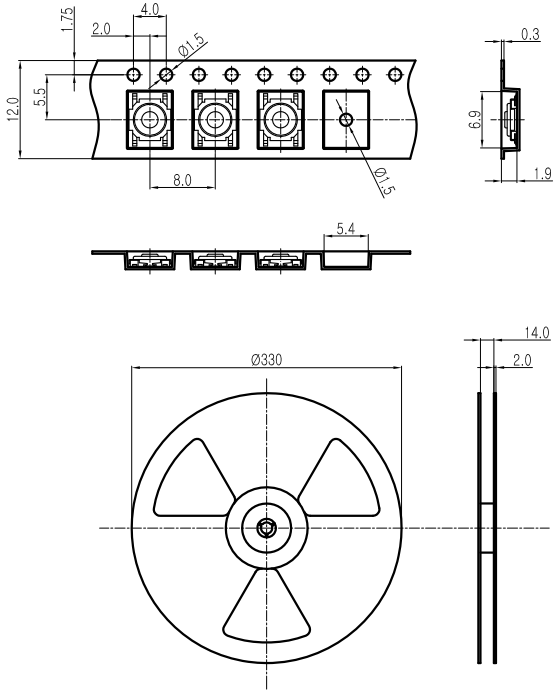

MODEL NAME	CODE NO.
JT-1140CK	130010000083
JT-1140L	130010000084
JT-1140W	130010000085
JT-1140WL	130010000086
JT-1140WA	130010000087
JT-1140WAL	130010000088

THE SPECIFICATION FOR PACKAGING

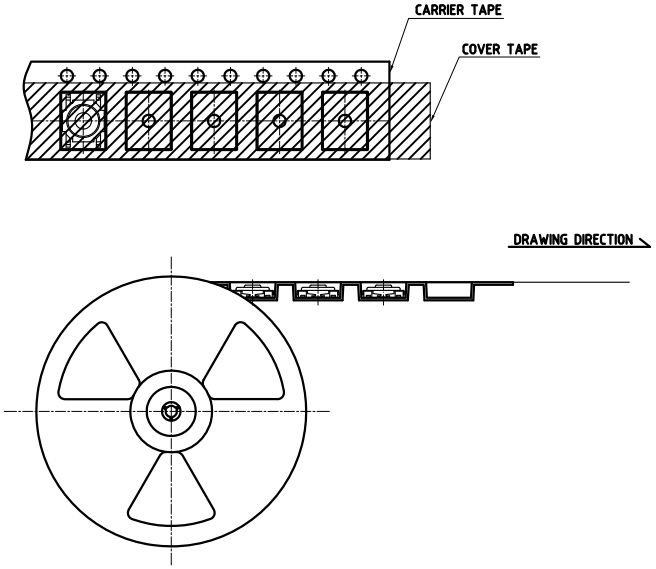

END TAPE

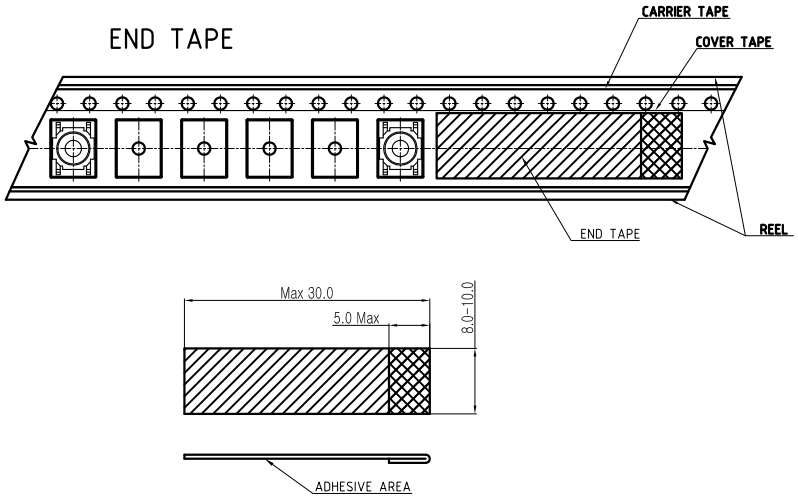

THE SPECIFICATION FOR PACKAGING

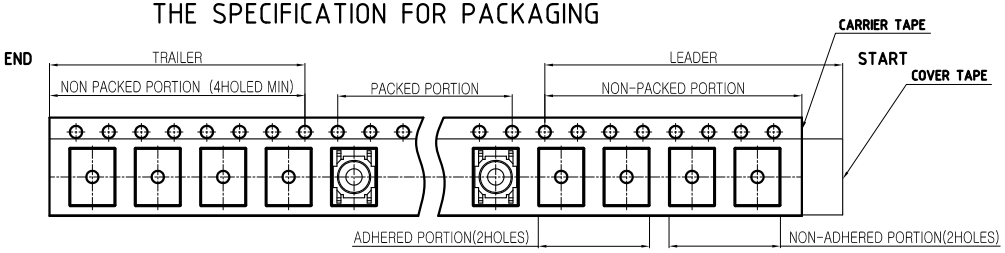

NOTE

4,000 pcs SWITCHES PER 1 REEL

Designed by H.Z.T		NAMAE ELECTRONICS		
Checked by B.SAGONG				
Approved by T.H.OH	Unit mm	Scale N/S	Date 2008.04.11	
Item TACTILE SWITCH	Tool Au	Sheet 1/1	Rev. 1	
Model JT-1140 Series	Drawing name EMBOSSED TAPE ASS'Y			