REV	LOCATIONS	DESCRIPTION	DATE	REVISER	APPD

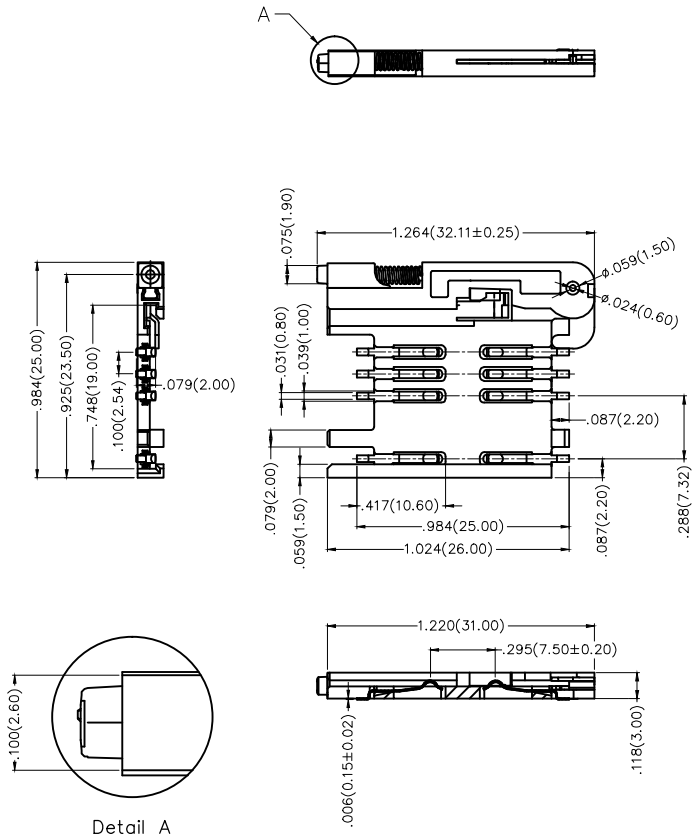

Detail A
4:1

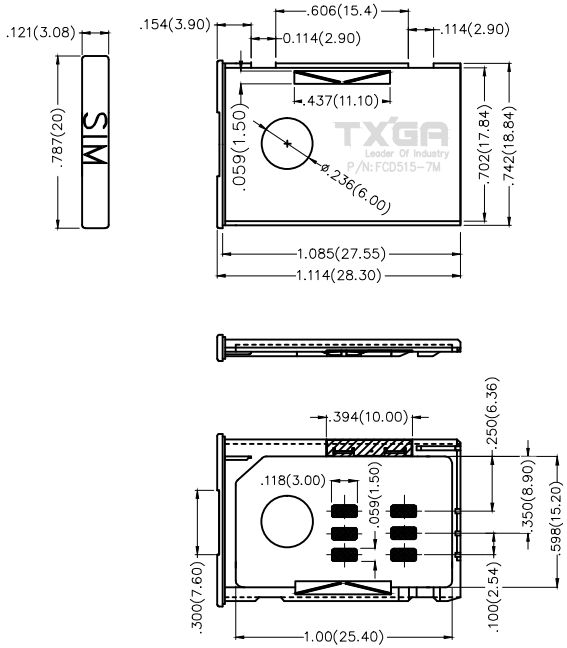

Electrical
- Current Rating: 0.5A AC(rms)/DC
- Voltage Rating: 50V AC(rms)/DC
- Contact Resistance: 40 mΩ Max
- Insulation Resistance: 1000 MΩ MIN
- Withstanding Voltage: 500V AC r.m.s
- Temperature Range–Operating: −25°C～+80°C

Material and Plating
- Housing: High Temperature Plastic(UL 94V–0)
- Contact Pin: Phosphor Bronze
- Plating: Gold Plated/Tin Plated
- Durability: 5,000 Times

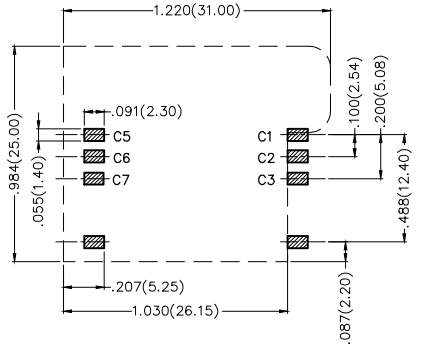

Recommended P.C.Board Layout

Ordering Information

FCD	5	15	—	7	X
1	2	3		4	5

1	Category	2	Series Number	3	Distinction No.	4	Type	5	Packaging
	FCD–Card		5–SIM Card		15		7–Outside Welding		M–Reel L–Tube

PIN NO.	PIN NAME
C1	Supply Voltage Vcc
C2	Rest(RST)
C3	Clock (CLK)
C4	N/A
C5	Ground(GND)
C6	Programming Voltage Vpp
C7	I/O
C8	N/A

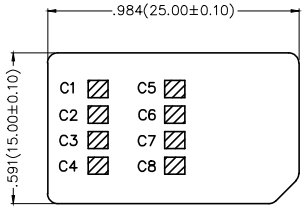

REFERENCE SIM CARD

THIRD ANGLE PROJECTION	GENERAL TOLERANCES (UNLESS SPECIFIED)		APPROVE BY FRANK	DATE 28/JUN/13	PART NO. FCD515–7X	ITEM NO. FCD515
DESIGN UNITS Inch (metric)	X.±.012(0.30)	X.°±5°	CHECKED BY JACOB	DATE 28/JUN/13	TITLE SIM card connector(H:3mm)	REV 0 / SHEET NO. 1/1
	X.X±.008(0.20)	.X°±2°				
SCALE 5:1 / SIZE A4	X.XX±.006(0.15)	.XX°±1°	DRAWN BY CHERRY	DATE 28/JUN/13		
	X.XXX±.004(0.10)	.XXX°±0.5°				

TXGA Leader Of Industry

THIS DRAWING CONTAINS INFORMATION THAT IS PROPRIETARY TO TXGA INDUSTRIAL ELECTRONICS(S.Z)CO.,LTD AND SHOULD NOT BE USED WITHOUT WRITTEN PERMISSION