	COUNT	DESCRIPTION OF REVISIONS	BY	CHKD	DATE		COUNT	DESCRIPTION OF REVISIONS	BY	CHKD	DATE
△					. .	△					. .
△					. .	△					. .
△					. .	△					. .

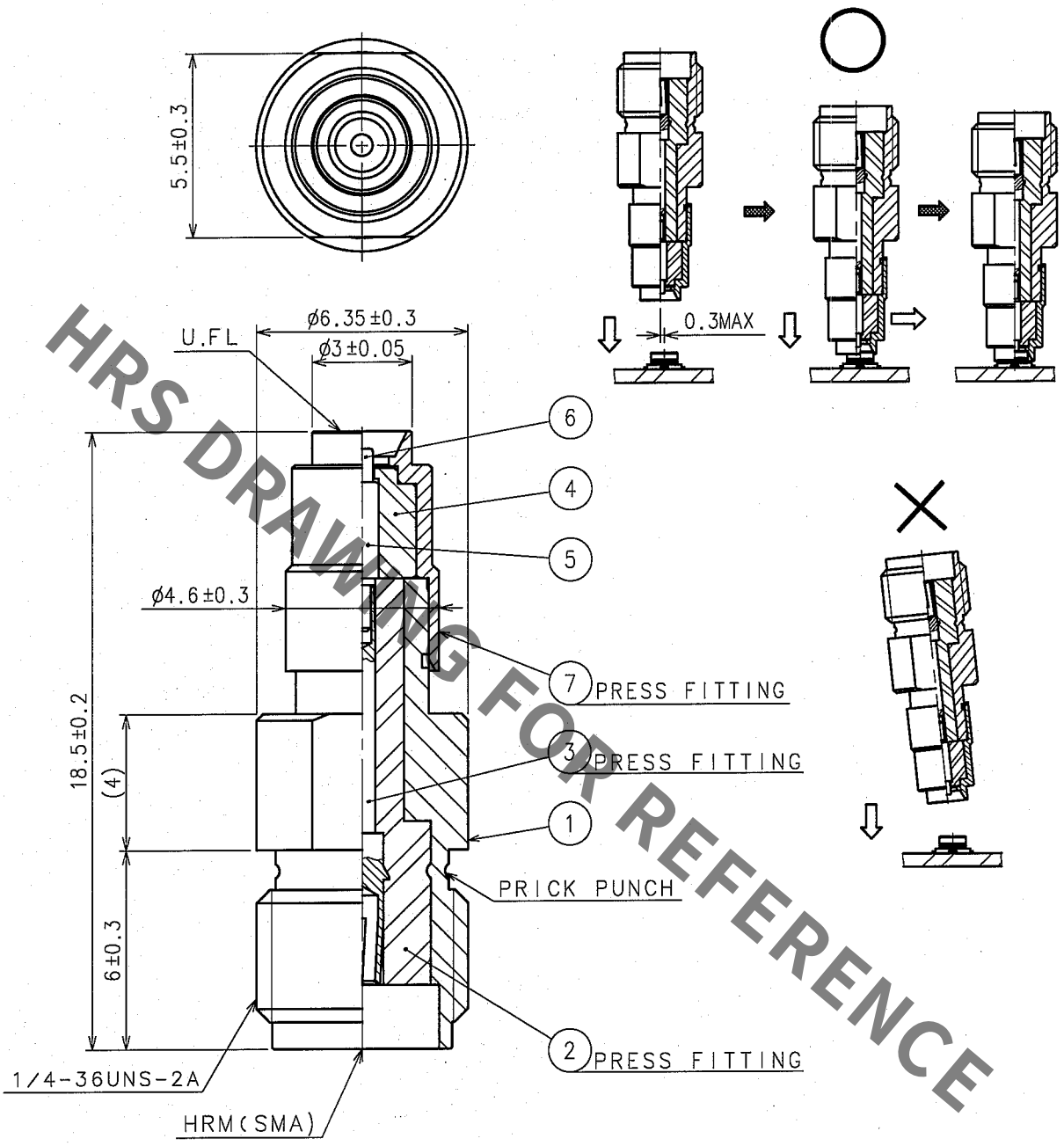

HRS DRAWING FOR REFERENCE

NO.	MATERIAL	FINISH, REMARKS	NO.	MATERIAL	FINISH, REMARKS
4	PTFE				
3	BERYLLIUM COPPER	GOLD PLATING	7	STAINLESS STEEL	GOLD PLATING
2	PTFE		6	BERYLLIUM COPPER	GOLD PLATING(FREE CONTACT)
1	BRASS	NICKEL PLATING	5	BRASS	GOLD PLATING

CODE NO.(OLD)	DRAWN	DESIGNED	CHECKED	APPROVED	RELEASED
ROHS COMPLIANT	N. Ninomiya '05.09.01	N. Ninomiya '05.09.01	K. Shimizu '05.09.01	I. Mitani '05.09.02	

SCALE 5 : 1	DRAWING NO. EDC4-310623	PART NO. HRMJ-U.FLP-ST4
UNITS mm	HRS HIROSE ELECTRIC CO.,LTD.	CODE NO. CL311-0409-1 1/1

FORM NO.228

TO
RF

Sep.1.2019 Copyright 2019 HIROSE ELECTRIC CO., LTD. All Rights Reserved.
In case of consideration for using Automotive equipment / device which demand high reliability, kindly contact our sales window correspondents.