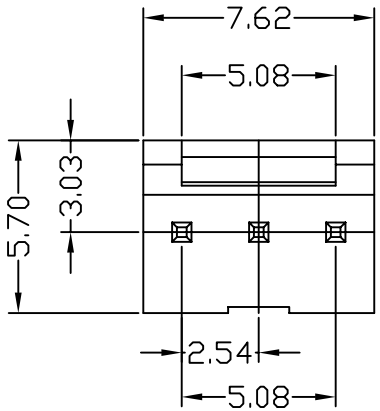

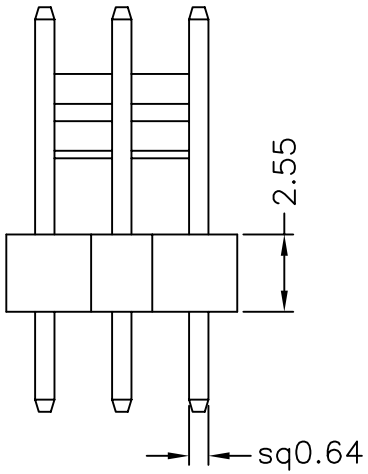

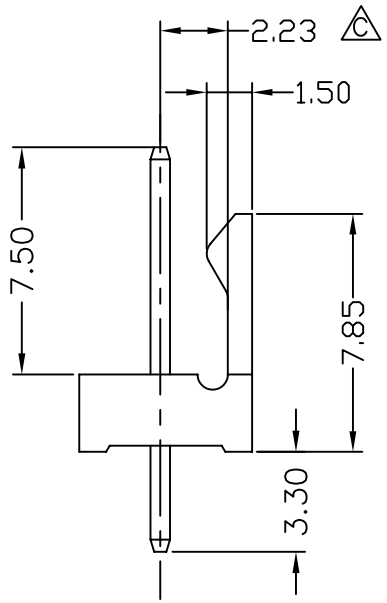

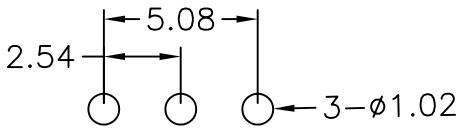

Recommended P.C.B Layout

MATERIAL

Insulator : NY66 + 30% Glass fiber
Contact Pin : Brass

SPECIFICATION

Current Rate : 2.5 AMP
Dielectric voltage : 250V AC for one minute
Insulation Resistance : 1000MΩMin.
Contact Resistance : 20mΩMax
Operation Temperature : −25°C to + 85°C

744−8 1−03 T W 00
1 2 3 4 5

1. 8: Green Product
2. No. of contacts per row
3. G: Gold flash
   S: Selective
   T: Tin plated
4. W: Nature Color Insulator
5. Pinrex internal code.

REV.	DESCRIPTION	DATE
C	ADD SIZE	2011/07/27
B	REVISE ILLUSTRATION	2008/10/24
A	RELEASE	2005/10/24

TOLERANCE
.0 =±.50
.00 =±.30
.000 =±.XXX
.0000=±.
ANG.=±3°

UNITS : mm

SCALE NONE | SIZE A4 | SHEET 1 OF 1 | REV. C

OLD PART NO.
DRAWER 胡雨婷
CHECK
APP'D

TITLE
2.54mm WIRE TO BOARD HEADER
DIP 180° TYPE

NEW PART NO. 744−81−03TW00

頻銳科技股份有限公司
PINREX TECHNOLOGY CORP.

DRAW NO. 744−81−03TW00(C版)