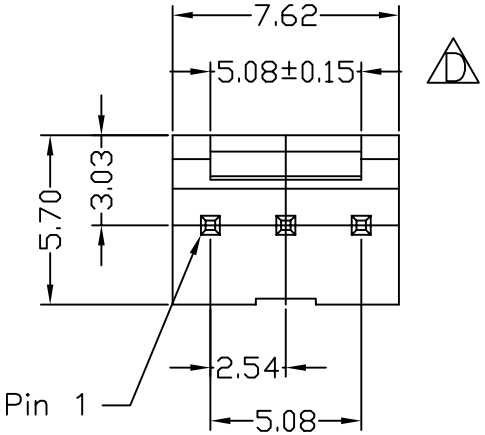

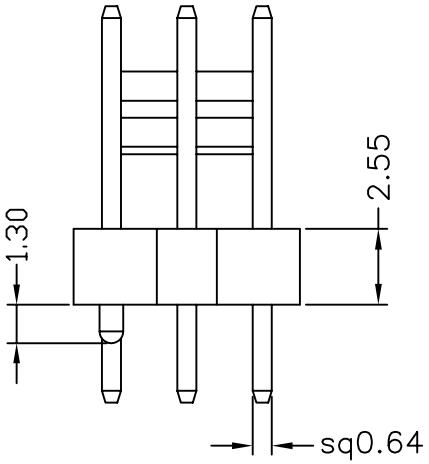

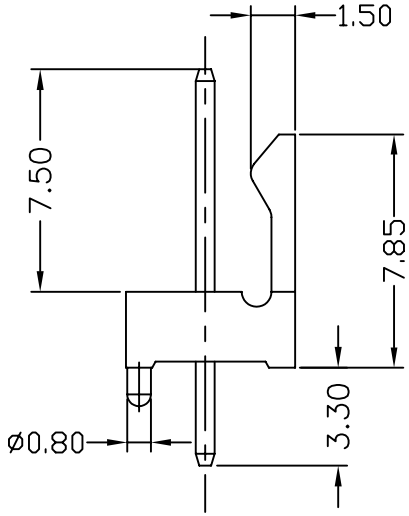

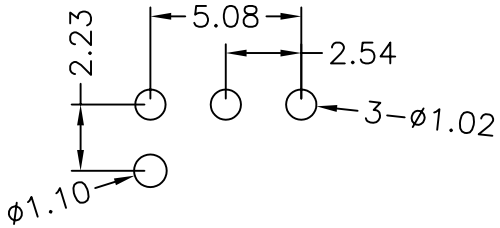

Recommended P.C.B Layout

MATERIAL
Insulator : NY66 + 30% Glass fiber
Contact Pin : Brass

SPECIFICATION
Current Rate : 2.5 AMP
Dielectric voltage : 250V AC for one minute
Insulation Resistance : 1000MΩMin.
Contact Resistance : 20mΩMax
Operation Temperature : −25°C to + 85°C

744−8 1−03 T G 10
1 2 3 4 5

1. 8: Green Product
2. No. of contacts per row
3. G: Gold flash
   S: Selective
   T: Tin plated
4. G: light gray Insulator (7541C)
5. Pinrex internal code.

REV.	DESCRIPTION	DATE
D	ADD TOLERANCE	2011/06/01
C	REVISE DESCRIPTION	2009/08/05
B		2008/12/26
A	RELEASE	2008/11/06

TOLERANCE
.0 =±.50
.00 =±.30
.000 =±.XXX
.0000=±.
ANG.=±3°

UNITS : mm

SCALE NONE | SIZE A4

OLD PART NO. 2544S−03TG

DRAWER Teresa | CHECK

SHEET 1 OF 1 | REV. D | APP'D

TITLE
2.54mm WIRE TO BOARD HEADER
DIP 180° TYPE

NEW PART NO. 744−81−03TG10

頻銳科技股份有限公司
PINREX TECHNOLOGY CORP.

DRAW NO. 744−81−03TG10(D版)