KEMET Part Number: R46KI3220DQM2K

R46_275, Film, Metallized Polypropylene, Safety, 0.22 uF, 10%, 560 VDC, 275 VAC (X2), 110C, Lead Spacing = 15mm

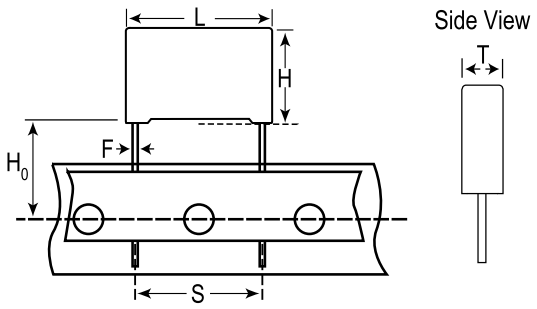

General Information	
Supplier:	KEMET
Series:	R46_275
Dielectric:	Metallized Polypropylene
Style:	Radial
Features:	EMI Safety
RoHS:	Yes
Lead:	Wire Leads
Qualifications:	ENEC, UL, cUL, CQC
AEC-Q200:	No
Notes:	We Recommended To Use R46 @ 310 VAC

Dimensions	
L	18mm +0.5mm
H	13.5mm +0.1mm
T	7.5mm +0.2mm
S	15mm +0.6/-0.1mm
H0	18.5mm +/-0.5mm
F	0.6mm +/-0.05mm

Specifications	
Capacitance:	0.22 uF
Capacitance Tolerance:	10%
Voltage DC:	560 VDC
Voltage AC:	275 VAC (X2)
Temperature Range:	-40/+110C
Rated Temperature:	110C
Dissipation Factor:	0.1% 1kHz
Insulation Resistance:	100 GOhms
Max dV/dt:	400 V/us
Safety Class:	X2

Packaging Specifications	
Packaging:	Ammo, 360x340x59mm, Box
Packaging Quantity:	440

Statements of suitability for certain applications are based on our knowledge of typical operating conditions for such applications, but are not intended to constitute - and we specifically disclaim - any warranty concerning suitability for a specific customer application or use. This Information is intended for use only by customers who have the requisite experience and capability to determine the correct products for their application. Any technical advice inferred from this Information or otherwise provided by us with reference to the use of our products is given gratis, and we assume no obligation or liability for the advice given or results obtained.

© 2006 - 2018 IntelliData.net